SITE ID-CANDIDATE LETTER/CASCADE ID-CANDIDATE LETTER:
9MDB001142D/WA90XSH53D

LATITUDE/LONGITUDE:
38.81495812/-76.75117697

CROSS STREET:
WATER ST & JUDGES DR

CITY, STATE, ZIP:
UPPER MARLBORO, MD 20772

IF YOU DIG IN ANY STATE DIAL 811 FOR THE LOCAL "ONE CALL CENTER" – IT'S THE LAW

THE UTILITIES SHOWN HEREIN ARE FOR THE CONTRACTORS CONVENIENCE ONLY. THERE MAY BE OTHER UTILITIES NOT SHOWN ON THESE PLANS. THE ENGINEER/SURVEYOR ASSUMES NO RESPONSIBILITY FOR THE LO–CATIONS SHOWN AND IT SHALL BE THE CONTRACTOR'S RESPONSIBILITY TO VERIFY ALL THE UTILITIES WITHIN THE LIMITS OF THE WORK. ALL DAMAGE MADE TO THE (E) UTILITIES BY THE CONTRACTOR SHALL BE THE SOLE RESPONSIBILITY OF THE CONTRACTOR.

NOTE:
GENERAL CONTRACTOR IS REQUIRED TO CROSS CHECK COORDINATES. EXHIBIT PHOTO, AERIAL PHOTO AND SITE PLAN TO ENSURE PROPER POLE LOCATION PRIOR TO BREAKING GROUND. CONCERNS OR QUESTIONS SHOULD BE IMMEDIATELY DIRECTED TO ASSIGNED MOBILITIE CM.

GENERAL NOTES

THE FACILITY IS UNMANNED AND NOT FOR HUMAN HABITATION. A TECHNICIAN WILL VISIT THE SITE AS REQUIRED FOR ROUTINE MAINTENANCE. THE PROJECT WILL NOT RESULT IN ANY SIGNIFICANT DISTURBANCE OF EFFECT ON DRAINAGE; NO SANITARY SEWER SERVICE, POTABLE WATER OR TRASH DISPOSAL IS REQUIRED AND NO COMMERCIAL SIGNAGE IS (N).

SITE INFORMATION

SITE ID:	9MDB001142D
CASCADE ID:	WA90XSH53D
LATITUDE:	38.81495812
LONGITUDE:	–76.75117697
CROSS STREET:	WATER ST & JUDGES DR
CITY, STATE, ZIP:	UPPER MARLBORO, MD 20772
COUNTY:	PRINCE GEORGE'S COUNTY
JURISDICTION:	UPPER MARLBORO TOWN
PROPERTY OWNER:	PUBLIC RIGHT–OF–WAY
APPLICANT:	TECHNOLOGY MD NETWORK COMPANY, LLC 3475 PIEDMONT ROAD NE, SUITE 1000 ATLANTA, GEORGIA 30305 PHONE: (312) 638–5400

ENGINEER

KMB DESIGN GROUP, LLC
1800 ROUTE 34, SUITE 209
WALL, NJ 07719
FOR QUESTIONS EMAIL: DESIGNTEAM@KMBDG.COM
TEL: (732) 280–5623 FAX: (732) 280–3980 www.KMBDG.com

DO NOT SCALE DRAWINGS

CONTRACTORS SHALL VERIFY ALL PLANS, (E) DIMENSIONS & FIELD CONDITIONS ON THE JOB SITE & SHALL IMMEDIATELY NOTIFY THE ARCHITECT/ENGINEER IN WRITING OF ANY DISCREPANCIES BEFORE PROCEEDING WITH THE WORK OR BE RESPONSIBLE FOR SAME.

LOCATION MAPS

VICINITY MAP

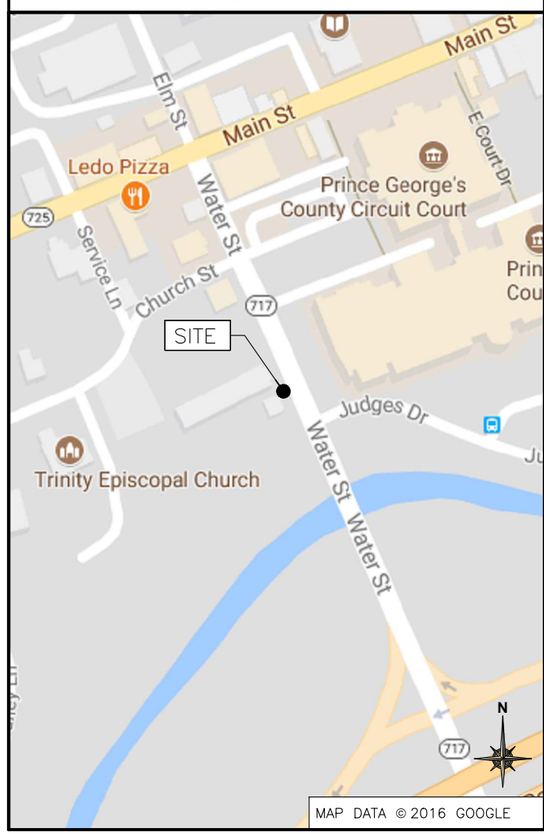

REGIONAL MAP

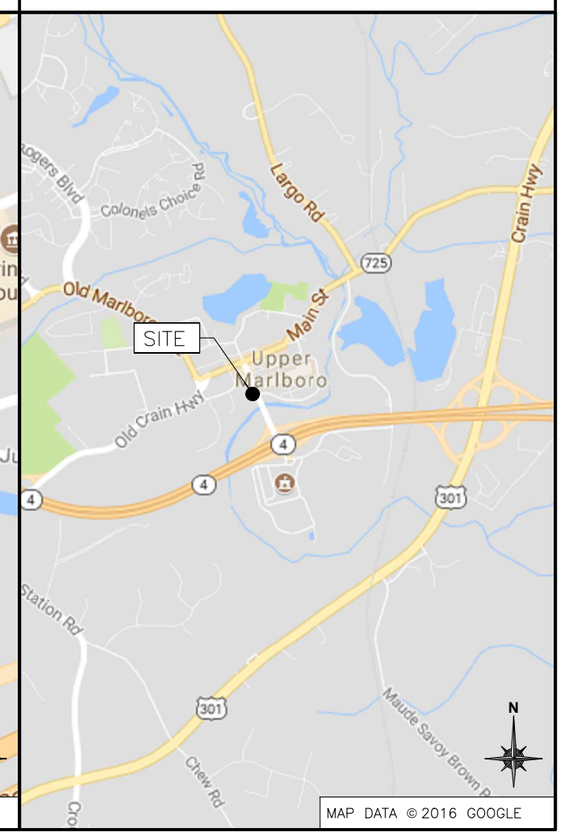

PROJECT DESCRIPTION

END USER PROPOSES TO INSTALL EQUIPMENT ON AN EXISTING WOOD POLE WITHIN AN EXISTING RIGHT–OF–WAY. THE SCOPE WILL CONSIST OF THE FOLLOWING:

– INSTALL PROPOSED BACKHAUL TRANSPORT EQUIPMENT ON AN EXISTING WOOD UTILITY POLE

CODES

2015 INTERNATIONAL BUILDING CODE
NATIONAL ELECTRICAL SAFETY CODE
TIA/EIA–222–G–2 OR LATEST EDITION
LOCAL BUILDING/PLANNING CODE

DRAWING INDEX

SHEET NO:	SHEET TITLE
T–1	TITLE SHEET
SP–1	EXHIBIT PHOTO & SITE PLAN
EV–1	ELEVATIONS
EV–2	ELEVATIONS
PL–1	PLUMBING & RISER DIAGRAM
EQ–1	EQUIPMENT DETAILS
EQ–2	EQUIPMENT DETAILS
E–1	ELECTRICAL DETAILS
G–1	GROUNDING DETAILS
TC–1	VEHICULAR TRAFFIC CONTROL PLAN
TC–2	PEDESTRIAN TRAFFIC CONTROL PLAN
GN–1	GENERAL NOTES
GN–2	GENERAL NOTES
GN–3	GENERAL NOTES

TECHNOLOGY MD NETWORK COMPANY, LLC

INTERSTATE TRANSPORT AND BROADBAND

PROJECT NO:	9MDB001142D
DRAWN BY:	RC
CHECKED BY:	SJB

A	09–08–17	FOR CLIENT REVIEW

KMB DESIGN GROUP, LLC

STATE OF MARYLAND
STEPHEN A. BRAY
No. 36198
PROFESSIONAL ENGINEER

Stephen A. Bray
PROFESSIONAL ENGINEER

MD LICENSE: 36198 9/8/17

IT IS A VIOLATION OF THE LAW FOR ANY PERSON, UNLESS THEY ARE ACTING UNDER THE DIRECTION OF A LICENSED PROFESSIONAL ENGINEER, TO ALTER THIS DOCUMENT

WA90XSH53D
UPPER MARLBORO, MD 20772
EXISTING 26'-0" WOOD POLE

SHEET TITLE
TITLE SHEET

SHEET NUMBER
T-1

EXHIBIT PHOTO

SCALE: NOT TO SCALE

1

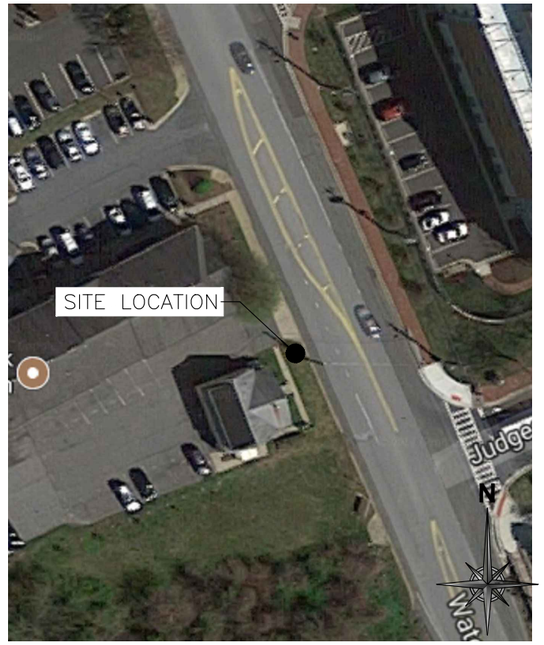

AERIAL SITE LOCATION

SCALE: NOT TO SCALE

2

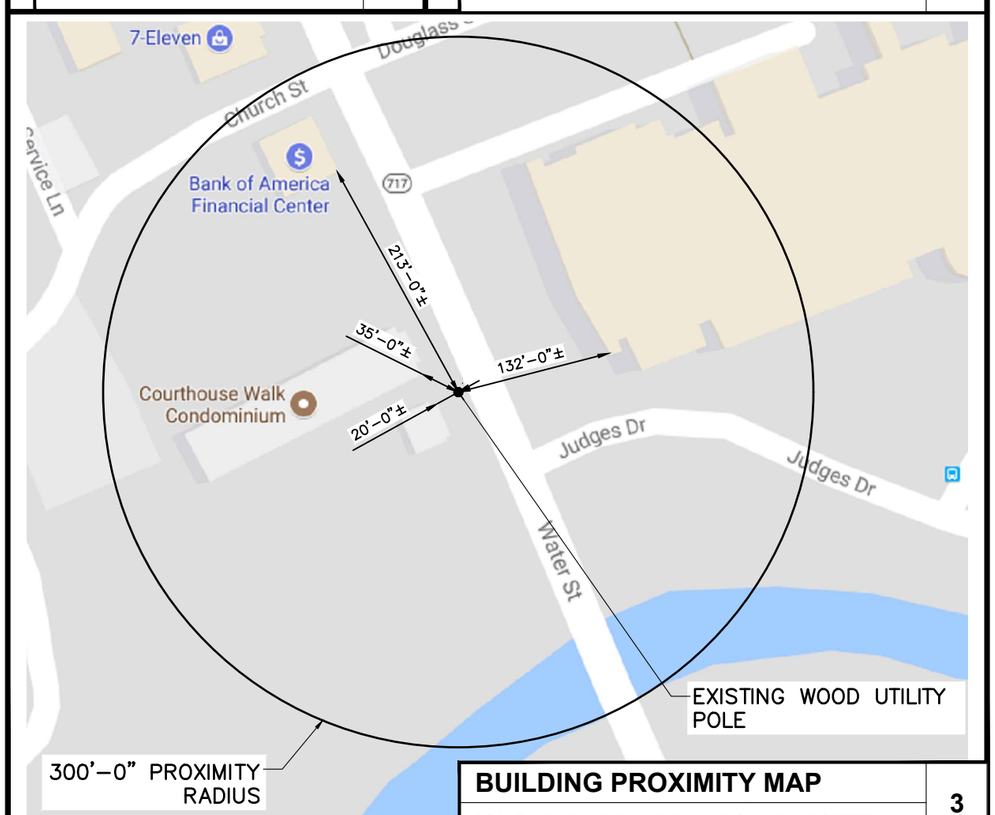

BUILDING PROXIMITY MAP

SCALE: 1/128" = 1'-0" (1/64" = 1'-0" ON 24"x36" SHEET)

3

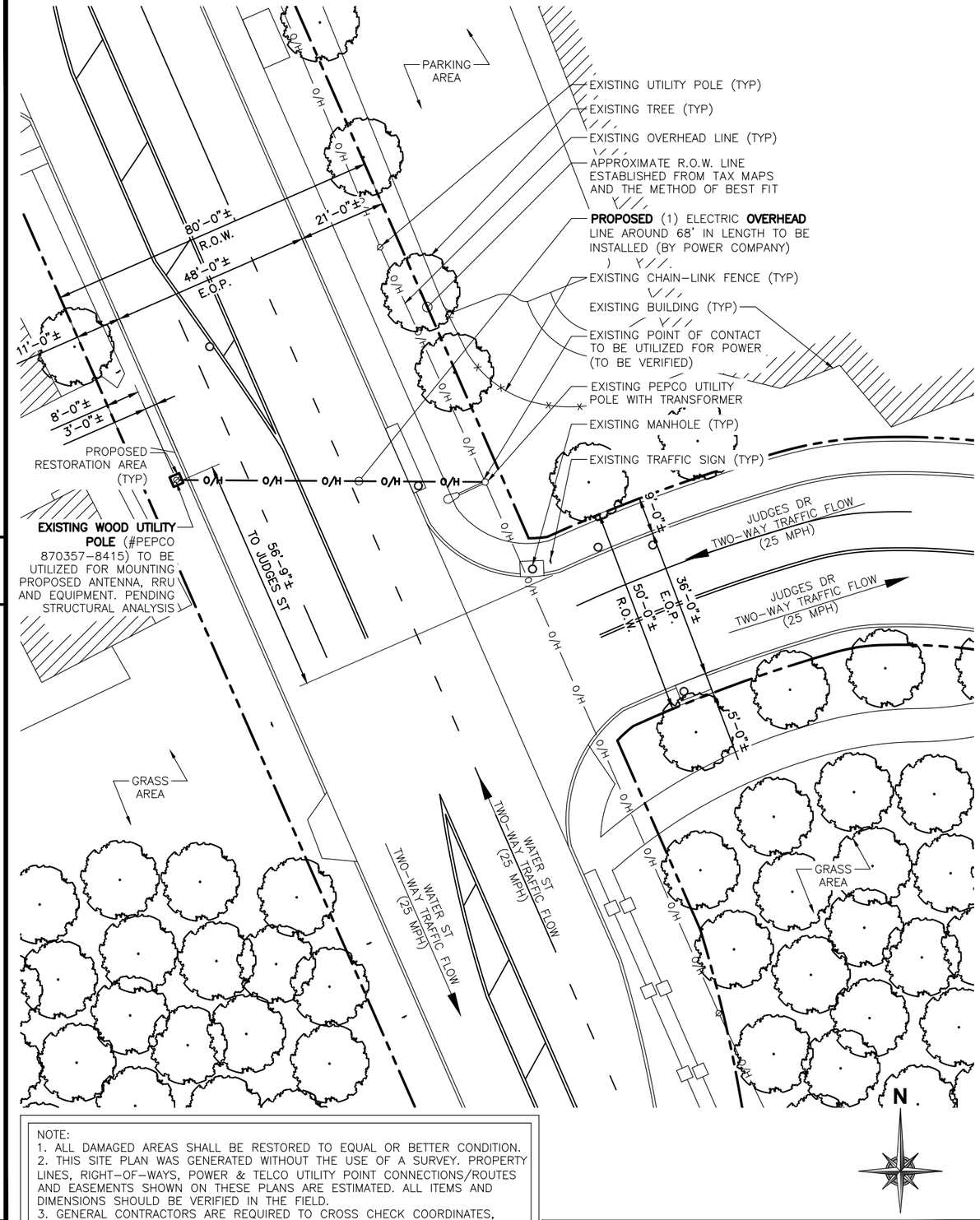

NOTE:
1. ALL DAMAGED AREAS SHALL BE RESTORED TO EQUAL OR BETTER CONDITION.
2. THIS SITE PLAN WAS GENERATED WITHOUT THE USE OF A SURVEY. PROPERTY LINES, RIGHT-OF-WAYS, POWER & TELCO UTILITY POINT CONNECTIONS/ROUTES AND EASEMENTS SHOWN ON THESE PLANS ARE ESTIMATED. ALL ITEMS AND DIMENSIONS SHOULD BE VERIFIED IN THE FIELD.
3. GENERAL CONTRACTORS ARE REQUIRED TO CROSS CHECK COORDINATES, AERIAL PHOTO AND SITE PLAN TO ENSURE PROPER POLE LOCATION PRIOR TO BREAKING GROUND. CONCERNS OR QUESTIONS SHOULD BE IMMEDIATELY DIRECTED TO THE ASSIGNED MOBILITIE CM.

ENLARGED SITE PLAN

SCALE: 1" = 30'-0" (1" = 15'-0" ON 24"x36" SHEET)

3

TECHNOLOGY MD NETWORK COMPANY, LLC

INTERSTATE TRANSPORT AND BROADBAND

PROJECT NO:	9MDB001142D
DRAWN BY:	RC
CHECKED BY:	SJB

A	09-08-17	FOR CLIENT REVIEW

KMB DESIGN GROUP, LLC

STATE OF MARYLAND · STEPHEN A. BRAY · No. 36198 · PROFESSIONAL ENGINEER

Stephen A. Bray
PROFESSIONAL ENGINEER

MD LICENSE: 36198 9/8/17

IT IS A VIOLATION OF THE LAW FOR ANY PERSON, UNLESS THEY ARE ACTING UNDER THE DIRECTION OF A LICENSED PROFESSIONAL ENGINEER, TO ALTER THIS DOCUMENT

WA90XSH53D
UPPER MARLBORO, MD 20772
EXISTING 26'-0" WOOD POLE

SHEET TITLE
EXHIBIT PHOTO & SITE PLAN

SHEET NUMBER
SP-1

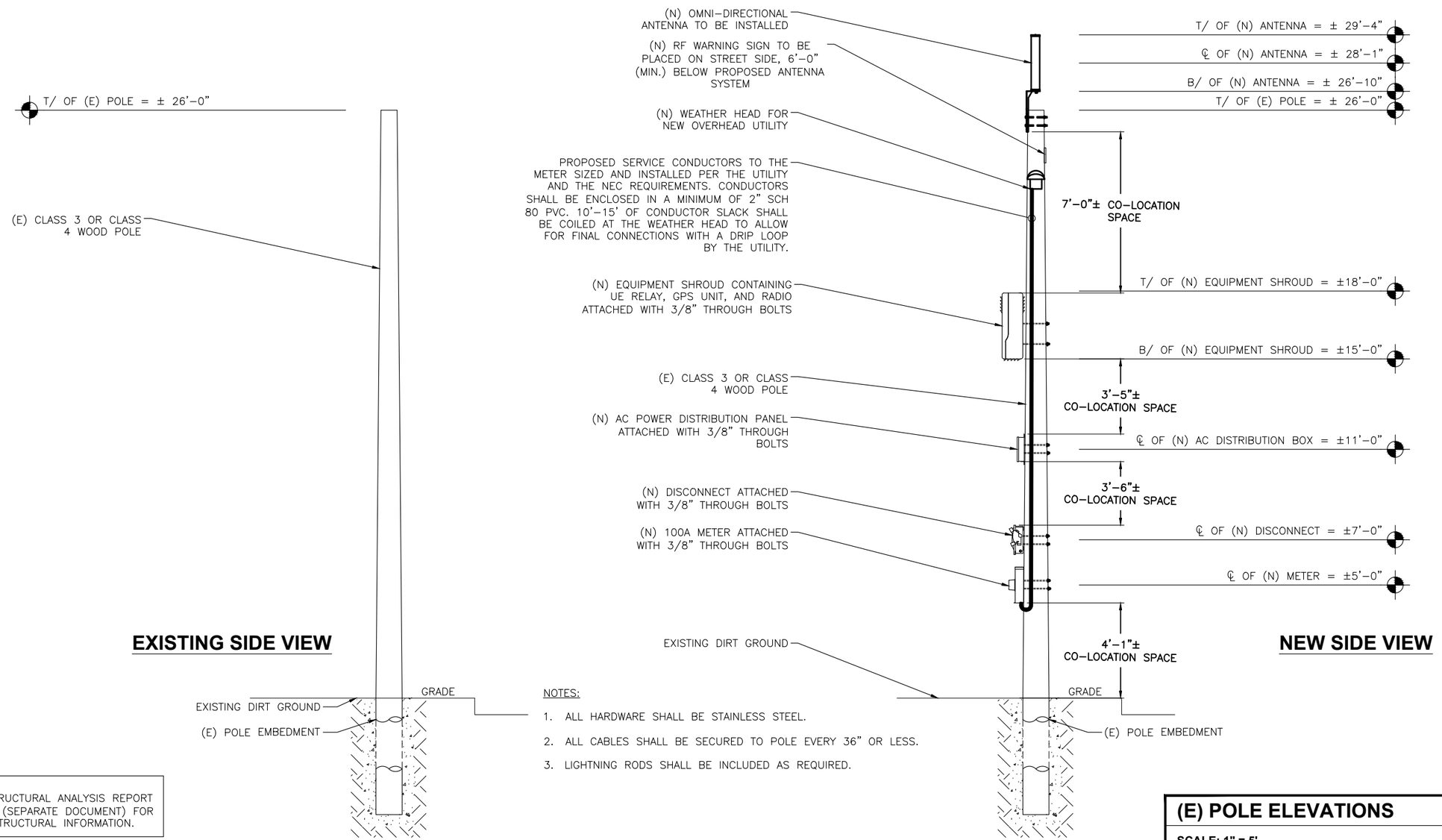

NOTES:

1. ALL HARDWARE SHALL BE STAINLESS STEEL.
2. ALL CABLES SHALL BE SECURED TO POLE EVERY 36" OR LESS.
3. LIGHTNING RODS SHALL BE INCLUDED AS REQUIRED.

NOTE:
REFER TO STRUCTURAL ANALYSIS REPORT WA90XSH53D (SEPARATE DOCUMENT) FOR ADDITIONAL STRUCTURAL INFORMATION.

(E) POLE ELEVATIONS

SCALE: 1" = 5'

1

TECHNOLOGY MD NETWORK COMPANY, LLC

INTERSTATE TRANSPORT AND BROADBAND

PROJECT NO:	9MDB001142D
DRAWN BY:	RC
CHECKED BY:	SJB

A	09-08-17	FOR CLIENT REVIEW

KMB DESIGN GROUP, LLC

STATE OF MARYLAND · STEPHEN A. BRAY · No. 36198 · PROFESSIONAL ENGINEER

Stephen A. Bray
PROFESSIONAL ENGINEER

MD LICENSE: 36198 9/8/17

IT IS A VIOLATION OF THE LAW FOR ANY PERSON, UNLESS THEY ARE ACTING UNDER THE DIRECTION OF A LICENSED PROFESSIONAL ENGINEER, TO ALTER THIS DOCUMENT

WA90XSH53D
UPPER MARLBORO, MD 20772
EXISTING 26'-0" WOOD POLE

SHEET TITLE
POLE ELEVATIONS

SHEET NUMBER
EV-1

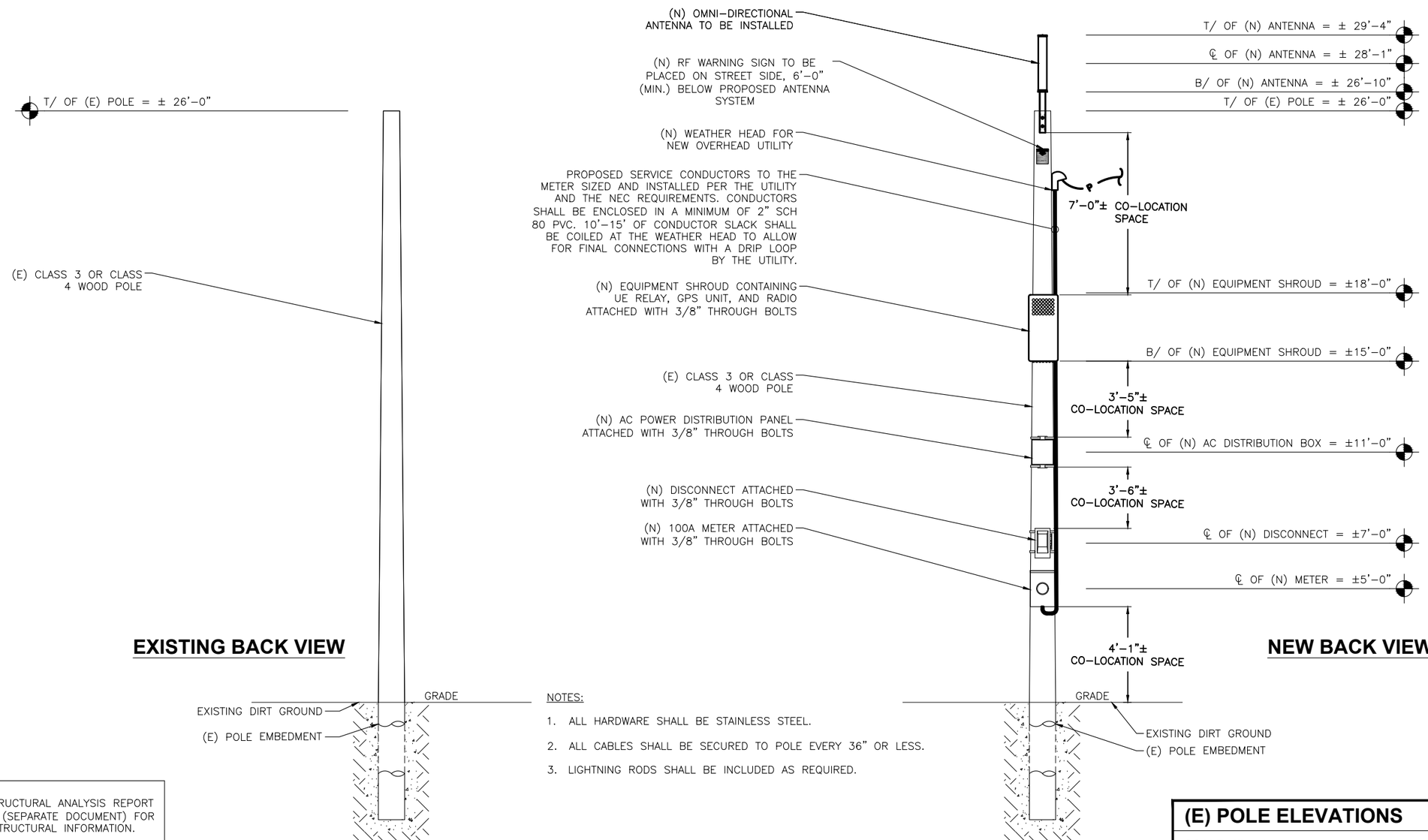

NOTES:

1. ALL HARDWARE SHALL BE STAINLESS STEEL.
2. ALL CABLES SHALL BE SECURED TO POLE EVERY 36" OR LESS.
3. LIGHTNING RODS SHALL BE INCLUDED AS REQUIRED.

NOTE:
REFER TO STRUCTURAL ANALYSIS REPORT WA90XSH53D (SEPARATE DOCUMENT) FOR ADDITIONAL STRUCTURAL INFORMATION.

(E) POLE ELEVATIONS

SCALE: 1" = 5'

1

TECHNOLOGY MD NETWORK COMPANY, LLC

INTERSTATE TRANSPORT AND BROADBAND

PROJECT NO:	9MDB001142D
DRAWN BY:	RC
CHECKED BY:	SJB

A	09-08-17	FOR CLIENT REVIEW

KMB DESIGN GROUP, LLC

STATE OF MARYLAND · STEPHEN A. BRAY · No. 36198 · PROFESSIONAL ENGINEER

Stephen A. Bray
PROFESSIONAL ENGINEER

MD LICENSE: 36198 9/8/17

IT IS A VIOLATION OF THE LAW FOR ANY PERSON, UNLESS THEY ARE ACTING UNDER THE DIRECTION OF A LICENSED PROFESSIONAL ENGINEER, TO ALTER THIS DOCUMENT

WA90XSH53D
UPPER MARLBORO, MD 20772
EXISTING 26'-0" WOOD POLE

SHEET TITLE
POLE ELEVATIONS

SHEET NUMBER
EV-2

NOTE:
(E) POLE MOUNTED EQUIPMENT NOT SHOWN FOR CLARITY.

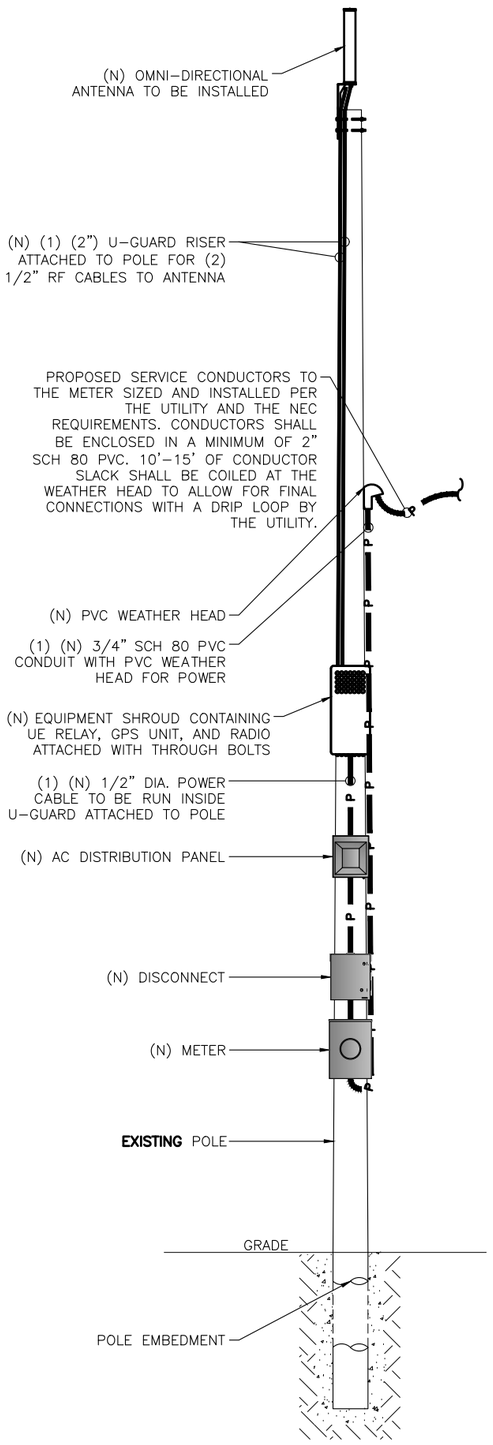

NOTE:
CABLING DIAGRAM IS FOR CLARITY OF CABLE ROUTE AND TERMINATION ONLY. CONTRACTOR SHALL INSTALL CABLES WITH MINIMAL VISUAL IMPACT ON **EXISTING WOOD UTILITY POLE**. SEE ELEVATION DRAWING FOR EQUIPMENT AND ANTENNA LOCATIONS.

CABLING NOTES:

A) WOOD, CONCRETE AND EXISTING METALLIC POLES

I) FROM GRADE LINE TO 11'-0" ABOVE GRADE, ALL CABLES/CONDUCTORS EXCEPT GROUNDING CONDUCTOR MUST RUN IN RIGID GALVANIZED STEEL CONDUIT (RGS)

II) GROUNDING CONDUCTORS IN EXPOSED LOCATIONS MUST BE INSTALLED IN PVC.

III) IN EARTH INSTALL PVC CONDUIT FOR BACKHAUL AND ELECTRICAL SERVICE. TRANSITION TO RGS AT GRADE LINE.

IV) ABOVE 11'-0" ALL CABLES (POWER, ETHERNET, COAXIAL) MUST RUN IN PVC UTILITY POLE RISER.

(1) AT MAJOR EQUIPMENT, EXTEND UTILITY DUCT IMMEDIATELY ADJACENT TO THE EQUIPMENT. INSTALL CABLES IN THE UTILITY POLE RISER CREATING CABLE DRIP LOOPS NOT LESS THAN THE CABLE BENDING RADIUS.

(2) INSIDE THE UTILITY POLE RISER, UTILIZE ½" COAX BLOCKS WITH LAG SCREWS TO SUPPORT COAX, RADIO AND MW POWER, RF COAX, AND ETHERNET CABLES TO WITHIN 12" OF THE EQUIPMENT BEING SERVED AND ON INTERVALS NOT TO EXCEED 6'.

V) FOR UNDERGROUND HFC/PUBLIC BACKHAUL, ROUTE ETHERNET CABLE IN CONDUIT UP THE POLE AND ENTER THE UTILITY POLE RISER. SEAL EXPOSED END OF CONDUIT WITH A CABLE TERMINATION FITTING.

VI) BY APPROVAL IN SELECT CASES LIQUID-TIGHT FLEXIBLE METALLIC CONDUIT (LFMC) MAY BE USED IN LENGTHS NOT TO EXCEED 36" TO EXTEND THE ELECTRICAL SERVICE CONDUIT TO THE AC DISTRIBUTION BOX. EXAMPLE: UTILITY-REQUIRED DISCONNECT ON POLE W/ AC DISTRIBUTION BOX ON OPPOSITE SIDE OF POLE. NOT REQUIRED FOR COAX.

B) NEW METALLIC POLES

I) PROCURE NEW POLES WITH SUITABLE HAND HOLES SUCH THAT HAND HOLES EXIST AT ALL EQUIPMENT LOCATIONS.

(1) WITH CLIENT APPROVAL IN SELECT CASES TO FACILITATE IMPROVED APPEARANCE, ½" COAXIAL CABLES MAY BE "SUPERFLEX" IN LIEU OF LDF-4.

II) WHERE POSSIBLE, INSTALL POLE BASE SUCH THAT THE ELECTRICAL FEED AND BACKHAUL (IF UNDERGROUND) CIRCUIT ENTER THE POLE THROUGH THE POLE BASE. IF A DISCONNECTING MEANS SEPARATE FROM THE AC DISTRIBUTION BOX IS REQUIRED BY JURISDICTION OR UTILITY, WITH APPROVAL IN SELECT CASES LIQUID-TIGHT FLEXIBLE METALLIC CONDUIT (LFMC) MAY BE USED IN LENGTHS NOT TO EXCEED 36" TO EXTEND THE ELECTRICAL SERVICE CONDUIT TO THE AC DISTRIBUTION BOX.

PLUMBING DIAGRAM

SCALE: NOT TO SCALE

1

BILL OF MATERIALS

QTY.	DESCRIPTION	MANUFACTURER	MODEL NUMBER	AZIMUTH	CABLE	DIMENSIONS (HxWxD)	WEIGHT
1	ANTENNA	ALPHA WIRELESS	AW3477-S	TBD	14'-0"±	30.7" X 4.7" DIAMETER	7 LBS
1	MMS SHROUD ENCLOSURE	ELTEK	SPRINT MMS SHROUD V1.0	TBD	3'±	35.6" X 15.5"X 9"	45 LBS
1	UE RELAY	AIRSPAN	iR460-SPB-ST-1-P-0	–		13" X 7" DIAMETER	8.8 LBS
1	GPS	NOKIA	FAWD/472932A	–	–	3.1" X 2.1" DIAMETER	0.3 LBS
1	RADIO	NOKIA	FWHR B41 HP	–	3'±	9.7" X 12.9" X 6.3"	27.3 LBS
–	–	–	–	–	–	–	–
1	AC DISTRIBUTION PANEL	RAYCAP	RSTAC-3112-P-120	–	1'±	9.25" X 9.5" X 3.81"	14 LBS
1	NEMA TYPE-3R DISCONNECT	SIEMENS	GF222NR (EXAMPLE)	–	1'±	15.45" X 8.7" X 5.95"	14 LBS
1	METER SOCKET	MILBANK	U4801-XL-5T9 (EXAMPLE)	–	89'±	19" X 13" X 4.84"	21 LBS

RFDS REVISION TYPE: NOT FINAL
RFDS REVISION NUMBER: N/A
RFDS REVISION TIMESTAMP: N/A

BILL OF MATERIALS

SCALE: NOT TO SCALE

2

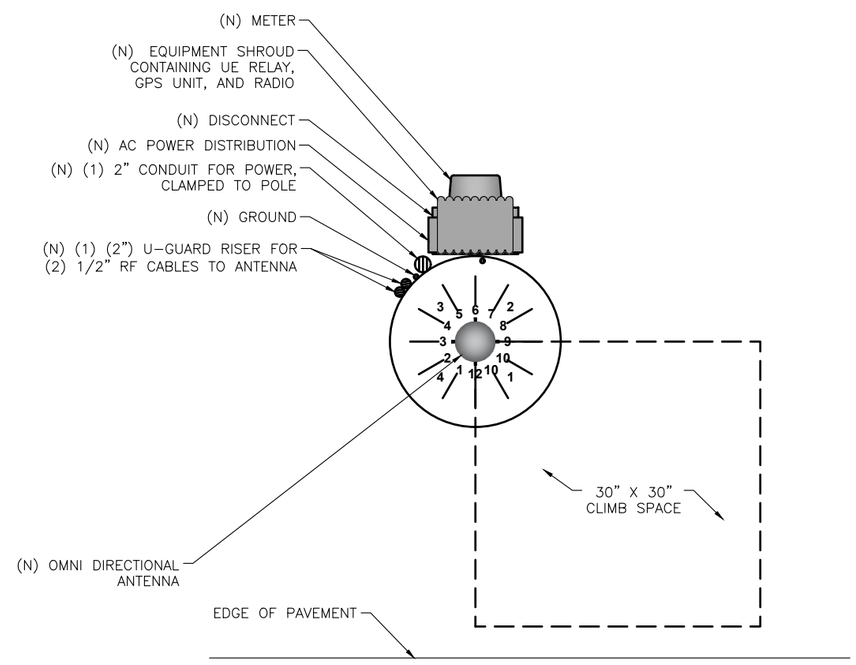

RISER ORIENTATION DIAGRAM

SCALE: NOT TO SCALE

3

TECHNOLOGY MD NETWORK COMPANY, LLC

INTERSTATE TRANSPORT AND BROADBAND

PROJECT NO:	9MDB001142D
DRAWN BY:	RC
CHECKED BY:	SJB

A	09-08-17	FOR CLIENT REVIEW

KMB DESIGN GROUP, LLC

STATE OF MARYLAND · STEPHEN A. BRAY · No. 36198 · PROFESSIONAL ENGINEER

Stephen A. Bray
PROFESSIONAL ENGINEER

MD LICENSE: 36198 9/8/17

IT IS A VIOLATION OF THE LAW FOR ANY PERSON, UNLESS THEY ARE ACTING UNDER THE DIRECTION OF A LICENSED PROFESSIONAL ENGINEER, TO ALTER THIS DOCUMENT

WA90XSH53D
UPPER MARLBORO, MD 20772
EXISTING 26'-0" WOOD POLE

SHEET TITLE
PLUMBING & RISER DIAGRAM

SHEET NUMBER
PL-1

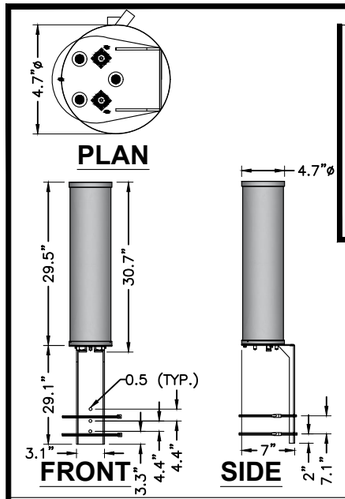

MANUFACTURER: ALPHA WIRELESS
MODEL: AW3477-S
HEIGHT: 30.7 IN
DIAMETER: 4.7 IN Ø
WEIGHT: 7 LBS
MOUNT WEIGHT: 4.4 LBS

ALPHA WIRELESS

ALPHA AW3477-S OMNI (B41)

SCALE N.T.S. | 1

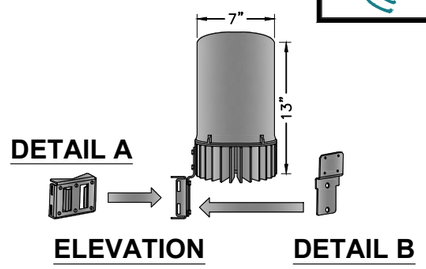

MANUFACTURER: AIRSPAN
MODEL: iR460
(OR APPROVED EQUAL)
HEIGHT: 13 IN
DIAMETER: 7 INØ
WEIGHT: 8.8 LBS

Airspan

UE RELAY iR460-SPB-ST-1-P-0

SCALE N.T.S. | 4

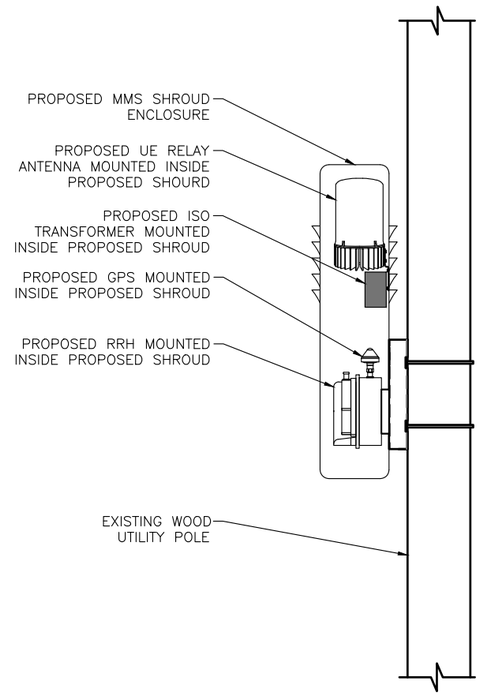

SHROUD CUT -AWAY DETAIL

SCALE N.T.S. | 7

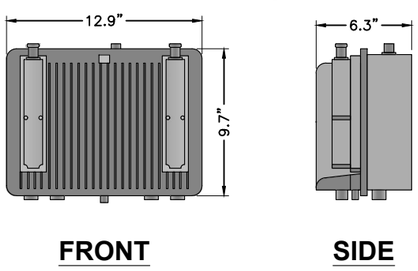

MANUFACTURER: NOKIA
MODEL: FWHR B41 HP
(473548A/473603A/473604A)
(OR APPROVED EQUAL)
HEIGHT: 9.7 IN
WIDTH: 12.9 IN
DEPTH: 6.3 IN
WEIGHT: 27.3 LBS

NOKIA

NOKIA RADIO FWHR B41 HP

SCALE N.T.S. | 2

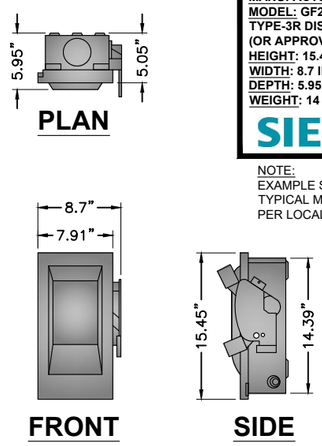

MANUFACTURER: SIEMENS
MODEL: GF222NR
TYPE-3R DISCONNECT
(OR APPROVED EQUAL)
HEIGHT: 15.45 IN
WIDTH: 8.7 IN
DEPTH: 5.95 IN
WEIGHT: 14 LBS

SIEMENS

NOTE:
EXAMPLE SHOWN MAY NOT BE TYPICAL MODEL, SELECT AS PER LOCAL REQUIREMENTS

NEMA TYPE-3R DISCONNECT

SCALE N.T.S. | 5

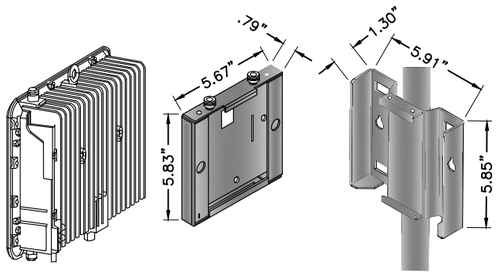

MANUFACTURER: NOKIA
MODEL: FMWA / 472858A
HEIGHT: 5.83 IN
WIDTH: 5.91 IN
DEPTH: 0.79 IN
WEIGHT: 2.2 LBS

NOKIA

NOKIA INTERFACE STATIC

NOKIA RADIO MOUNT

SCALE N.T.S. | 3

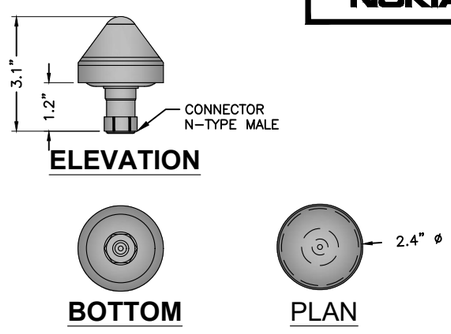

MANUFACTURER: NOKIA
MODEL: FAWD / 472932A
HEIGHT: 3.1 IN
DIAMETER: 2.4 IN Ø

NOKIA

NOKIA GPS UNIT

SCALE N.T.S. | 6

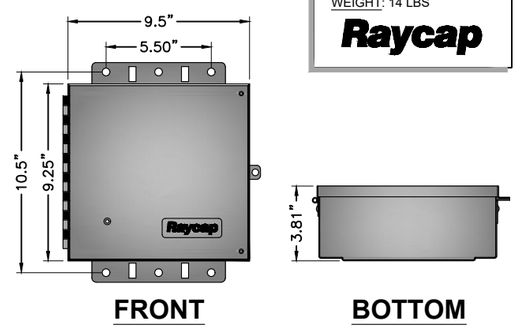

MANUFACTURER: RAYCAP
MODEL: RSTAC-3112-P-120
HEIGHT: 9.25 IN
WIDTH: 9.5 IN
DEPTH: 3.81 IN
WEIGHT: 14 LBS

Raycap

RAYCAP RSTAC-3112-P-120

SCALE N.T.S. | 8

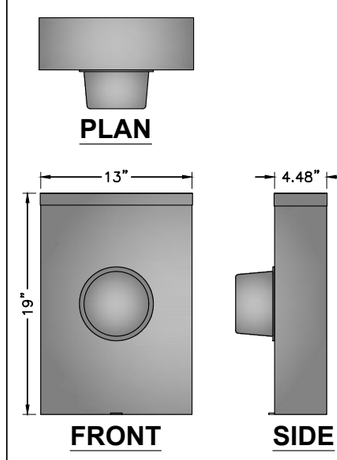

MANUFACTURER: MILBANK
MODEL: U4801-XL-5T9
(OR APPROVED EQUAL)
HEIGHT: 19 IN
WIDTH: 13 IN
DEPTH: 4.84 IN
WEIGHT: 21 LBS

NOTE:
EXAMPLE SHOWN MAY NOT BE TYPICAL MODEL, SELECT AS PER LOCAL REQUIREMENTS

MILBANK METER SOCKET

SCALE N.T.S. | 9

TECHNOLOGY MD NETWORK COMPANY, LLC

INTERSTATE TRANSPORT AND BROADBAND

PROJECT NO:	9MDB001142D
DRAWN BY:	RC
CHECKED BY:	SJB

A	09-08-17	FOR CLIENT REVIEW

KMB DESIGN GROUP, LLC

STATE OF MARYLAND · STEPHEN A. BRAY · No. 36198 · PROFESSIONAL ENGINEER

Stephen A. Bray
PROFESSIONAL ENGINEER

MD LICENSE: 36198 9/8/17

IT IS A VIOLATION OF THE LAW FOR ANY PERSON, UNLESS THEY ARE ACTING UNDER THE DIRECTION OF A LICENSED PROFESSIONAL ENGINEER, TO ALTER THIS DOCUMENT

WA90XSH53D
UPPER MARLBORO, MD 20772
EXISTING 26'-0" WOOD POLE

SHEET TITLE
EQUIPMENT DETAILS

SHEET NUMBER
EQ-1

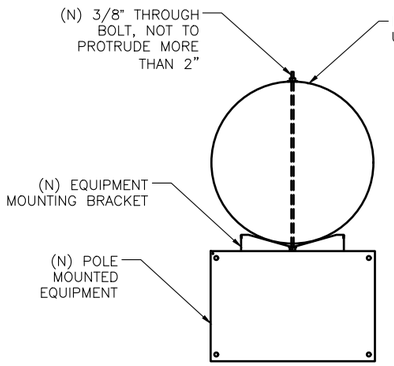

TOP VIEW

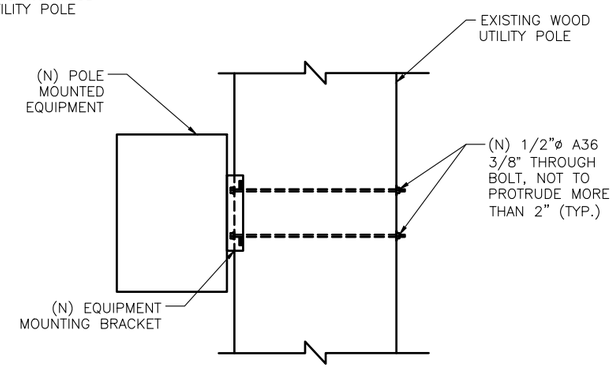

SIDE VIEW

EQUIPMENT MOUNTING DETAIL

SCALE: NOT TO SCALE

1

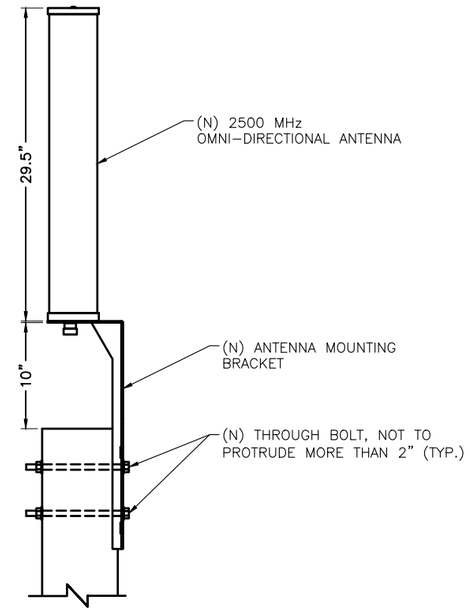

NOTE:

1. MOUNTING BRACKET ACCOMMODATES POLE SIZES FROM 3" TO 10" DIAMETER.
2. KMB DESIGN GROUP HAS NOT PERFORMED A STRUCTURAL EVALUATION FOR THE MOUNTING BRACKET. REFER TO THE MANUFACTURER FOR ADDITIONAL INFORMATION.

ANTENNA MOUNTING DETAIL

SCALE: NOT TO SCALE

3

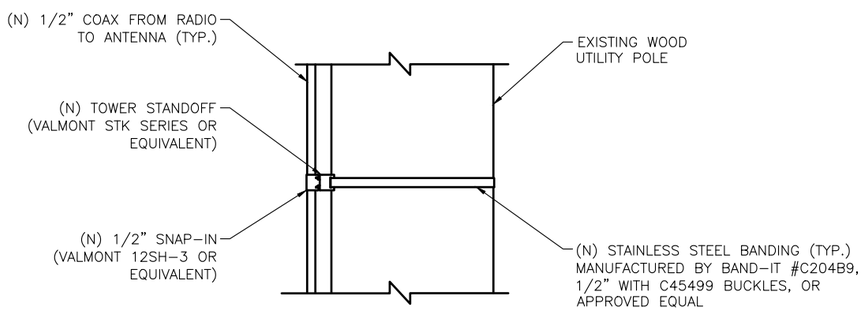

NOTE:
SPACE SNAP-INS PER CABLE MANUFACTURER'S SPECIFICATIONS

CABLE MOUNTING DETAIL

SCALE: NOT TO SCALE

2

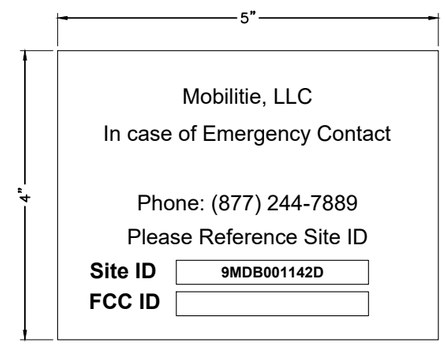

ANTENNA SIGNAGE:
ON WOOD POLES – SIGN ON ALUMINUM WITH SS SCREW TO THE POLE
SIGN PLACEMENT:
AFFIX TO THE STRUCTURE 3–4' BELOW THE COMMERCIAL RF ANTENNA(S)
SIZE APPROX. 8" x 5"

ANTENNA SIGNAGE

OWNER / OPERATOR NOTE:
SITE ID LABEL TO BE AFFIXED AT OR NEAR THE POINT OF POWER CONNECTION WITH TZeS241 LABELING TAPE OR EQUIVALENT BLACK ON WHITE LABELING TAPE OF AT LEAST 18mm WIDTH WITH EXTRA-STRENGTH ADHESIVE. USE ANY COMPATIBLE P-TOUCH LABEL MAKER. TEXT SHOULD BE PRINTED IN ALL CAPS WITH A MINIMUM HEIGHT OF 1/2".

EMERGENCY CONTACT SIGN

POLE MOUNTED SIGNS

SCALE: NOT TO SCALE

4

TECHNOLOGY MD NETWORK COMPANY, LLC

INTERSTATE TRANSPORT AND BROADBAND

PROJECT NO:	9MDB001142D
DRAWN BY:	RC
CHECKED BY:	SJB

A	09-08-17	FOR CLIENT REVIEW

KMB DESIGN GROUP, LLC

STATE OF MARYLAND STEPHEN A. BRAY No. 36198 PROFESSIONAL ENGINEER

Stephen A. Bray
PROFESSIONAL ENGINEER

MD LICENSE: 36198 9/8/17

IT IS A VIOLATION OF THE LAW FOR ANY PERSON, UNLESS THEY ARE ACTING UNDER THE DIRECTION OF A LICENSED PROFESSIONAL ENGINEER, TO ALTER THIS DOCUMENT

WA90XSH53D
UPPER MARLBORO, MD 20772
EXISTING 26'-0" WOOD POLE

SHEET TITLE
EQUIPMENT DETAILS

SHEET NUMBER
EQ-2

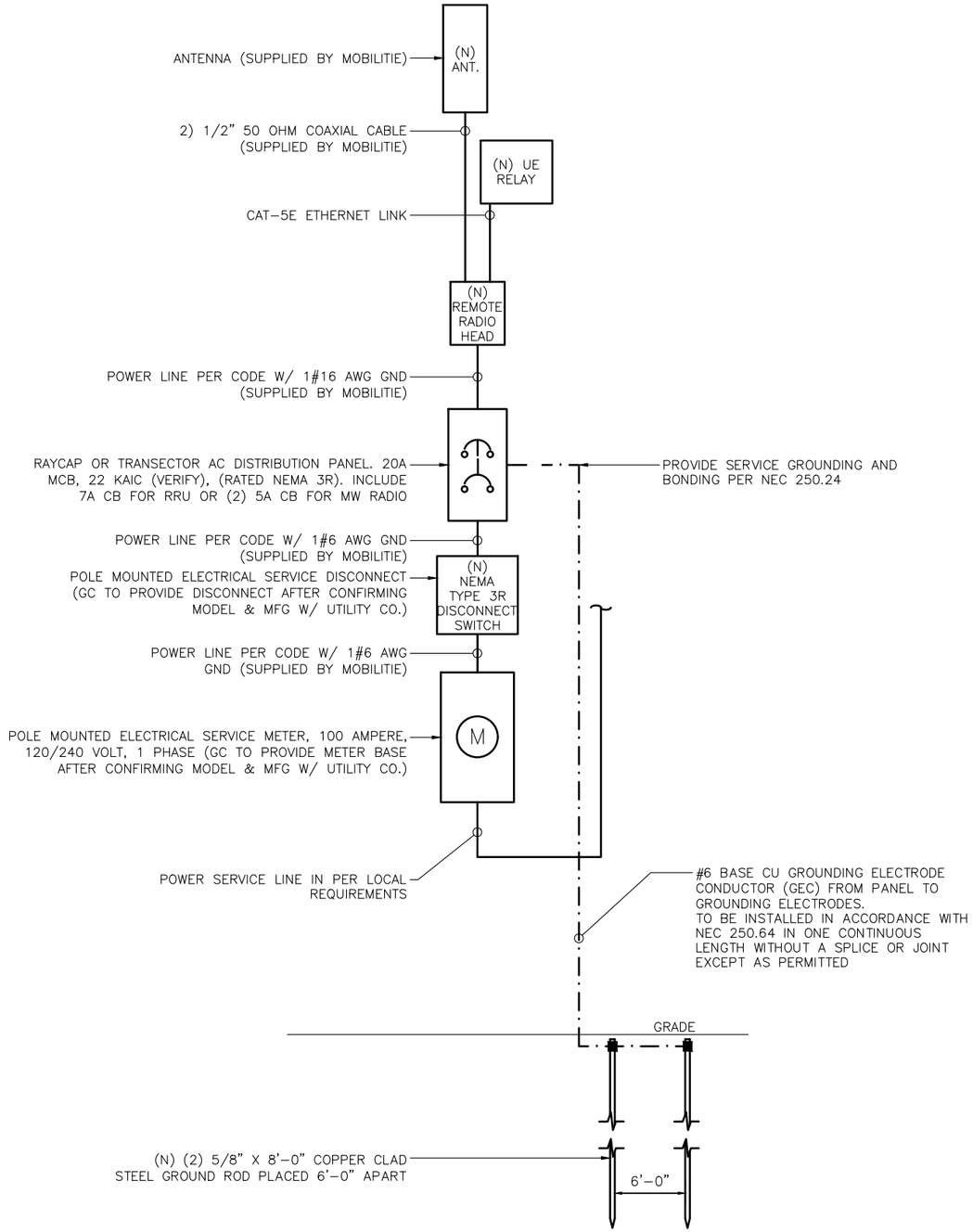

ONE-LINE DIAGRAM

SCALE: NOT TO SCALE

1

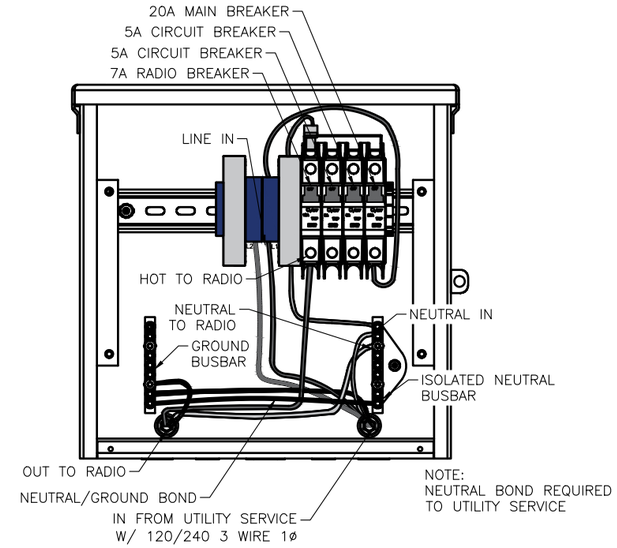

RAYCAP
AC DISTRIBUTION BOX

BREAKER SCHEDULE

SCALE: NOT TO SCALE

2

NOTES:

1. NOMINAL POWER IS CALCULATED AS 80% OF OEM DOCUMENTED MAXIMUM POWER.
2. CALCULATIONS FOR UE W/ NOKIA DO NOT NEED TO INCLUDE THE POWER FOR THE UE ANTENNA AS IT IS INCLUDED IN THE MAX POWER FIGURE. CALCULATIONS FOR UE W/ AIRSPAN MUST INCLUDE UE AS IT IS NOT INCLUDED
3. KVA IS CALCULATED FROM THE CONSUMPTION VALUE ASSUMING A PF=1. MAXIMUM POWER WAS USED FOR KVA. WHERE MAXIMUM WAS NOTED BY THE OEM THE QUOTED FIGURE WAS USED. WHERE AVERAGE/NOMINAL POWER WAS NOTED BY THE OEM MAXIMUM POWER WAS CALCULATED BY INCREASING AVERAGE/NOMINAL POWER BY A FACTOR OF 50%

Nokia Scenario 5 B41 High Power Radio and Aispan UE Backhaul

Unit	Sub Description	Max Power (W)	Max Current (A)	KVA	kWh/Yr
NSN - B41 High	LTE Base Station	360	4.00	0.36	3153.6
Airspan IR460	UE Relay	N/A	N/A	N/A	N/A
Total		**360**	**4.00**	**0.36**	**3153.6**

LOAD CALCULATIONS

SCALE: NOT TO SCALE

3

TECHNOLOGY MD NETWORK COMPANY, LLC

INTERSTATE TRANSPORT AND BROADBAND

PROJECT NO:	9MDB001142D
DRAWN BY:	RC
CHECKED BY:	SJB

A	09-08-17	FOR CLIENT REVIEW

KMB DESIGN GROUP, LLC

STATE OF MARYLAND · STEPHEN A. BRAY · No. 36198 · PROFESSIONAL ENGINEER

Stephen A. Bray
PROFESSIONAL ENGINEER

MD LICENSE: 36198 9/8/17

IT IS A VIOLATION OF THE LAW FOR ANY PERSON, UNLESS THEY ARE ACTING UNDER THE DIRECTION OF A LICENSED PROFESSIONAL ENGINEER, TO ALTER THIS DOCUMENT

WA90XSH53D
UPPER MARLBORO, MD 20772
EXISTING 26'-0" WOOD POLE

SHEET TITLE
ELECTRICAL DETAILS

SHEET NUMBER
E-1

NOTE:
CONTRACTOR TO SURROUND COMPLETED CONNECTION WITH HEAT–SHRINK TUBING TO ENSURE WEATHER PROOF CONNECTION

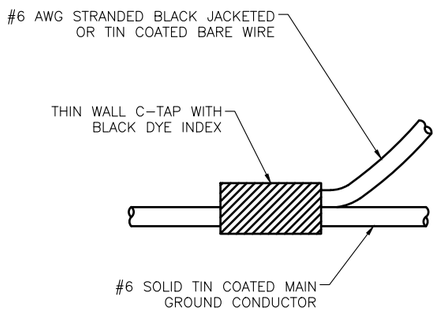

C-TAP DETAIL

SCALE: NOT TO SCALE

1

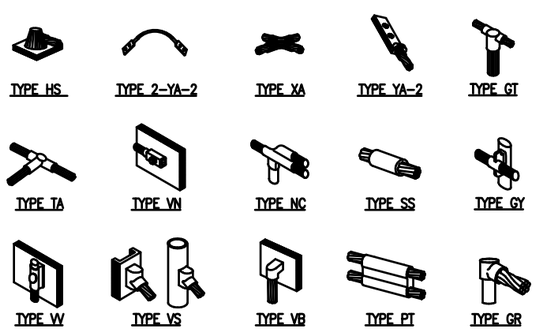

NOTE:

ERICO EXOTHERMIC "MOLD TYPES" SHOWN HERE ARE EXAMPLES. CONSULT WITH PROJECT MANAGER FOR SPECIFIC MOLDS TO BE USED FOR THIS PROJECT.

WELD CONNECTION DETAILS

SCALE: NOT TO SCALE

2

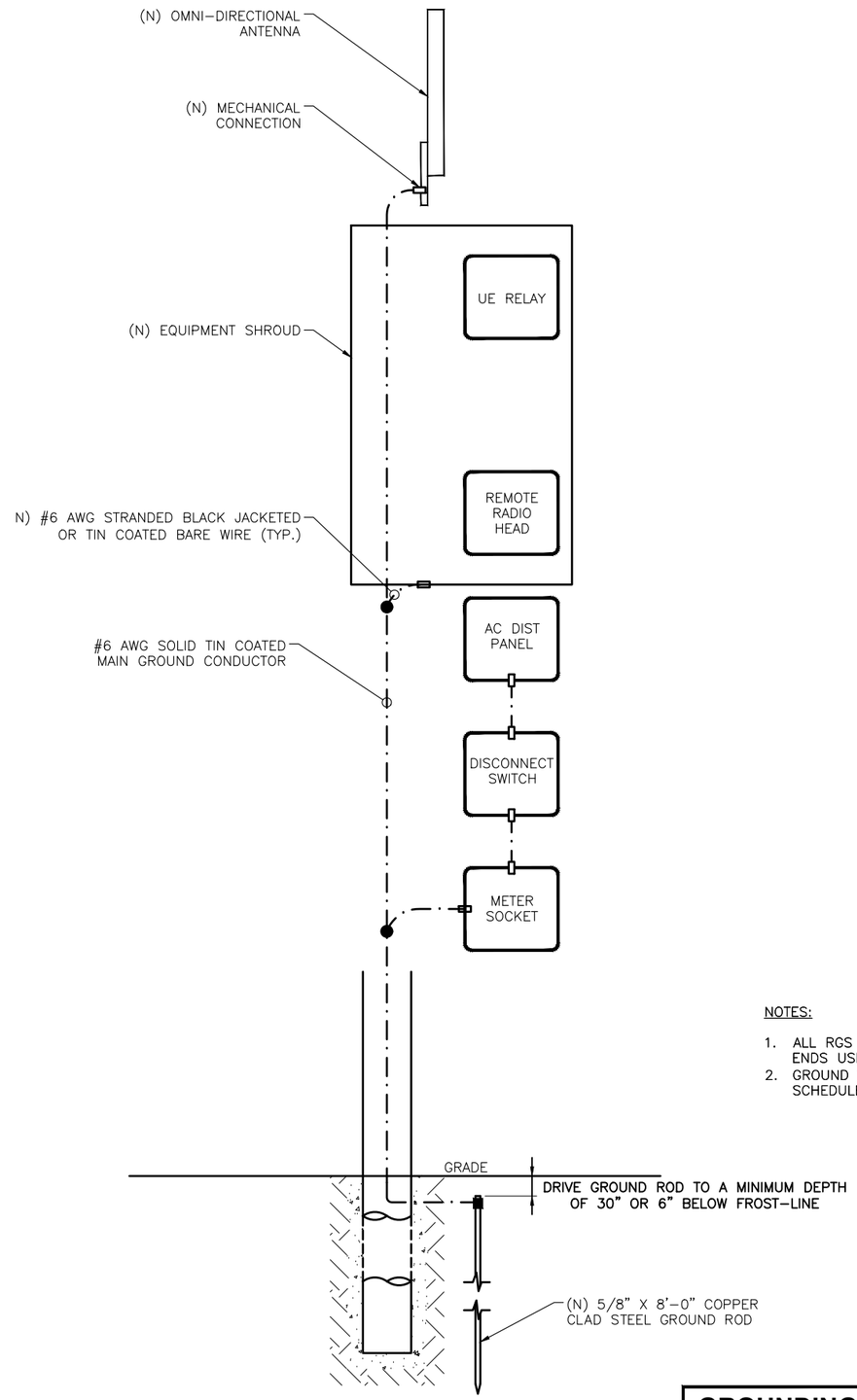

LEGEND
- ■ CADWELD CONNECTION
- ▭ MECHANICAL CONNECTION
- ● COMPRESSION CONNECTION

NOTE:
GROUNDING RISER FOR DIAGRAMMATIC PURPOSES ONLY. SEE ELEVATION DRAWING FOR EQUIPMENT AND ANTENNA LOCATIONS.

NOTES:

1. ALL RGS TO BE GROUNDED AT BOTH ENDS USING GROUNDING BUSHINGS
2. GROUND WIRE TO BE RUN IN 1/2" SCHEDULE 40 PVC.

GROUNDING RISER DIAGRAM

SCALE: NOT TO SCALE

3

TECHNOLOGY MD NETWORK COMPANY, LLC

INTERSTATE TRANSPORT AND BROADBAND

PROJECT NO:	9MDB001142D
DRAWN BY:	RC
CHECKED BY:	SJB

A	09–08–17	FOR CLIENT REVIEW

KMB DESIGN GROUP, LLC

STATE OF MARYLAND · STEPHEN A. BRAY · No. 36198 · PROFESSIONAL ENGINEER

Stephen A. Bray
PROFESSIONAL ENGINEER

MD LICENSE: 36198 9/8/17

IT IS A VIOLATION OF THE LAW FOR ANY PERSON, UNLESS THEY ARE ACTING UNDER THE DIRECTION OF A LICENSED PROFESSIONAL ENGINEER, TO ALTER THIS DOCUMENT

WA90XSH53D
UPPER MARLBORO, MD 20772
EXISTING 26'-0" WOOD POLE

SHEET TITLE
GROUNDING DETAILS

SHEET NUMBER
G-1

PLAN NOTES:

1. PLANS DEPICTED ARE GENERAL GUIDELINES FOR TEMPORARY VEHICULAR TRAFFIC CONTROL PLANS (TCP) TO INCLUDE PEDESTRIAN AND WORKER SAFETY. CONTRACTOR IS REQUIRED TO HAVE PREPARED A SITE-SPECIFIC TCP FOR REVIEW AND APPROVAL BY THE HIGHWAY AUTHORITY HAVING JURISDICTION. IF REQUIRED, THE FIRM PREPARING THE TCP SHALL BE AUTHORIZED OR CERTIFIED BY THE AUTHORITY HAVING JURISDICTION.
2. EXTEND CHANNELIZATION DEVICES INTO SHOULDER WHERE APPLICABLE.
3. DISTANCES AS INDICATED IN TABLE 1 SHOULD BE INCREASED FOR CONDITIONS THAT WOULD AFFECT STOPPING. DISTANCE SUCH AS DOWNGRADES OR LIMITED SIGHT DISTANCES. DISTANCES CAN BE DECREASED FOR LOW-SPEED (RESIDENTIAL) AREAS WITH APPROVAL BY THE AUTHORITY HAVING JURISDICTION. NIGHT-TIME WORK IS PROHIBITED UNLESS IT IS REQUIRED AS A CONDITION OF APPROVAL BY THE HIGHWAY AND LOCAL AUTHORITY HAVING JURISDICTION.
4. SHOULDER TAPERS SHOULD BE 1/3 OF THE ON-STREET TAPER LENGTH.
5. MAINTAIN A MINIMUM LANE WIDTH OF 10'.

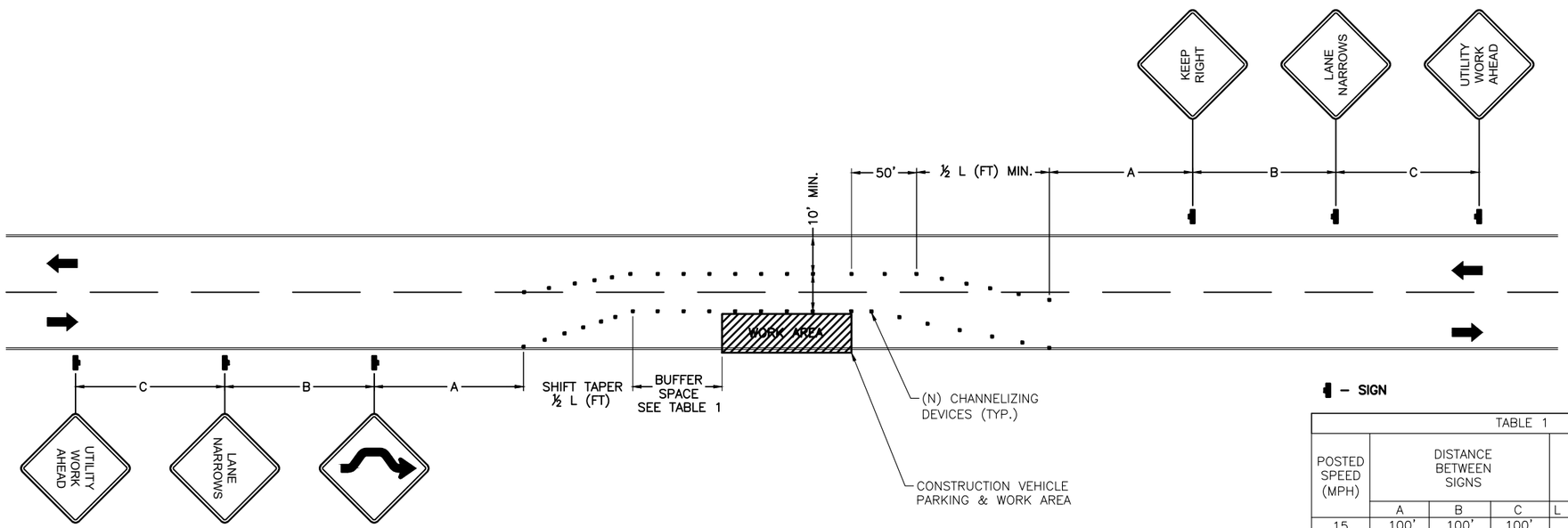

SIGN

TABLE 1					
POSTED SPEED (MPH)	DISTANCE BETWEEN SIGNS			TAPER	BUFFER
	A	B	C	L (SEE NOTE)	
15	100'	100'	100'	45'	100'
20	100'	100'	100'	80'	115'
25	100'	100'	100'	125'	155'
30	200'	200'	200'	180'	200'
35	200'	200'	200'	245'	250'
40	350'	350'	350'	320'	305'
45	350'	350'	350'	540'	360'
50	500'	500'	500'	600'	425'
55	500'	500'	500'	660'	495'
60	500'	500'	500'	720'	570'
65	500'	500'	500'	780'	645'

NOTES:

A) DISTANCES IN FEET UNLESS OTHERWISE NOTED.
B) CONTRACTOR TO VERIFY (E) SPEED LIMIT.
C) DISTANCES SHOWN ARE NOT VALID FOR LIMITED ACCESS HIGHWAYS. CONSULT STATE DOT MANUAL FOR DISTANCES.
D) ADJUST DISTANCES TO COMPLY WITH REQUIREMENT OF THE STATE OR LOCAL HIGHWAY AUTHORITY HAVING JURISDICTION. SEE NOTE 1, SHEET TC-2.
E) TAPER LENGTHS SHOWN BASED ON 12' LANE WIDTH. SEE NOTE 18, SHEET TC-2.

VEHICULAR TRAFFIC CONTROL PLAN - LANE SHIFT

1

SCALE: NOT TO SCALE

TECHNOLOGY MD NETWORK COMPANY, LLC

INTERSTATE TRANSPORT AND BROADBAND

PROJECT NO:	9MDB001142D
DRAWN BY:	RC
CHECKED BY:	SJB

A	09-08-17	FOR CLIENT REVIEW

KMB DESIGN GROUP, LLC

STATE OF MARYLAND · STEPHEN A. BRAY · No. 36198 · PROFESSIONAL ENGINEER

Stephen A. Bray
PROFESSIONAL ENGINEER

MD LICENSE: 36198 9/8/17

IT IS A VIOLATION OF THE LAW FOR ANY PERSON, UNLESS THEY ARE ACTING UNDER THE DIRECTION OF A LICENSED PROFESSIONAL ENGINEER, TO ALTER THIS DOCUMENT

WA90XSH53D
UPPER MARLBORO, MD 20772
EXISTING 26'-0" WOOD POLE

SHEET TITLE
VEHICULAR TRAFFIC CONTROL PLAN

SHEET NUMBER
TC-1

TRAFFIC CONTROL GENERAL NOTES

1. ALL TEMPORARY TRAFFIC CONTROL SIGNAGE, LAYOUTS AND PROCEDURES SHALL COMPLY WITH LOCAL JURISDICTIONAL REQUIREMENTS AND MANUAL OF UNIFORM TRAFFIC CONTROL DEVICES (MUTCD), LATEST EDITION, WHICHEVER IS MORE STRINGENT.
2. PRIOR TO ANY ROAD CONSTRUCTION, TRAFFIC CONTROL SIGNS AND DEVICES SHALL BE IN PLACE.
3. TRAFFIC CONTROL DEVICES FOR LANE CLOSURES INCLUDING SIGNS, CONES, BARRICADES, ETC. SHALL BE PLACED AS SHOWN ON PLANS. SIGNS SHALL NOT BE PLACED WITHOUT ACTUAL LANE CLOSURES AND SHALL BE IMMEDIATELY REMOVED UPON REMOVAL OF THE CLOSURES.
4. SELECTION, PLACEMENT, MAINTENANCE, AND PROTECTION OF TRAFFIC, PEDESTRIANS, AND WORKERS SHALL BE IN ACCORDANCE WITH THE MANUAL OF UNIFORM TRAFFIC CONTROL DEVICES (MUTCD) – PART VI "TEMPORARY TRAFFIC CONTROL", AND LOCAL JURISDICTIONAL REQUIREMENTS UNLESS OTHERWISE NOTED IN THE PLANS AND SPECIFICATIONS, AND SHALL BE APPROVED BY THE APPROPRIATE HIGHWAY AUTHORITY HAVING JURISDICTION.
5. ADVANCE WARNING SIGNS, DISTANCES, AND TAPER LENGTHS MAY BE EXTENDED TO ADJUST FOR REDUCED VISIBILITY DUE TO HORIZONTAL AND VERTICAL CURVATURE OF THE ROADWAY AND FOR ACTUAL TRAFFIC SPEEDS IF IN EXCESS OF POSTED SPEED LIMITS.
6. TAPERS SHALL BE LOCATED TO MAXIMIZE THE VISIBILITY OF THEIR TOTAL LENGTH.
7. CONFLICTING OR NON–OPERATING SIGNAL INDICATIONS ON THE (E) TRAFFIC SIGNAL SYSTEMS SHALL BE BAGGED OR COVERED.
8. ALL (E) ROAD SIGNS, PAVEMENT MARKINGS AND/OR PLOWABLE PAVEMENT REFLECTORS WHICH CONFLICT WITH THE (N) TRAFFIC CONTROL PLAN SHALL BE COVERED, REMOVED, OR RELOCATED. ALL TRAFFIC CONTROL DEVICES SHALL BE RESTORED TO MATCH PRE–CONSTRUCTION CONDITION AFTER COMPLETION OF WORK.
9. CONTRACTOR SHALL CONTACT LOCAL AUTHORITY HAVING HIGHWAY JURISDICTION AND PROVIDE ADDITIONAL "FLAGMEN" OR POLICE SUPERVISION, IF REQUIRED.
10. ALL EXCAVATED AREAS WITHIN OR ADJACENT TO THE ROADWAY SHALL BE BACKFILLED AND PLACED ON A MINIMUM 6H:1V SLOPE PRIOR TO END OF EACH WORK DAY. OTHER EXCAVATED AREAS WITHIN THE CLEAR ZONE ARE TO BE EITHER BACKFILLED OR PRECAST CONCRETE CURB BARRIER CONSTRUCTION BARRIER SET TEMPORARILY IN PLACE TO SHIELD VEHICULAR AND PEDESTRIAN TRAFFIC.
11. WHERE DICTATED BY LOCAL CONDITIONS, THE CONTRACTOR SHALL MAKE PROVISIONS FOR MAINTAINING PEDESTRIAN AND WORKER CROSSING LOCATIONS IN ACCORDANCE WITH ALL APPLICABLE CODES AND OSHA REQUIREMENTS.
12. CONSTRUCTION ZONE SPEED LIMIT IF REDUCED FROM POSTED LIMITS SHALL BE IN ACCORDANCE WITH MUTCD AND WILL BE DETERMINED BY THE AUTHORITY HAVING JURISDICTION.
13. THERE SHALL BE NO WORKERS, EQUIPMENT, OR OTHER VEHICLES IN THE BUFFER SPACE OR THE ROLL AHEAD SPACE.
14. DRIVEWAYS AND/OR SIDE STREETS ENTERING THE ROADWAY AFTER THE FIRST ADVANCE WARNING SIGN SHALL BE PROVIDED WITH AT LEAST ONE W20–1 SIGN (ROAD WORK AHEAD) AS A MINIMUM.
15. CONES MAY BE SUBSTITUTED FOR DRUMS AND INSTALLED UPON THE APPROVAL OF THE AUTHORITY HAVING JURISDICTION PROVIDED THEY COMPLY WITH MUTCD.
16. THE SPACING BETWEEN CONES, TUBULAR MARKERS, VERTICAL PANELS, DRUMS, AND BARRICADES SHOULD NOT EXCEED A DISTANCE IN FEET EQUAL TO 1.0 TIMES THE SPEED LIMIT IN MPH WHEN USED FOR TAPER CHANNELIZATION, AND A DISTANCE IN FEET EQUAL TO 2.0 TIMES THE SPEED LIMIT IN MPH WHEN USED FOR TANGENT CHANNELIZATION.
17. WHEN CHANNELIZATION DEVICES HAVE THE POTENTIAL OF LEADING VEHICULAR TRAFFIC OUT OF THE INTENDED VEHICULAR TRAFFIC SPACE, THE CHANNELIZATION DEVICES SHOULD BE EXTENDED A DISTANCE IN FEET OF 2.0 TIMES THE SPEED LIMIT IN MPH BEYOND THE DOWNSTREAM END OF THE TRANSITION AREA.
18. TAPER LENGTHS ARE CALCULATED AS FOLLOWS:
$L = WS^2/60$ (40 MPH AND HIGHER) OR $L2 = WS$ (OVER 40 MPH),
WHERE W= OFFSET WIDTH (FT), S= TRAFFIC SPEED (MPH).

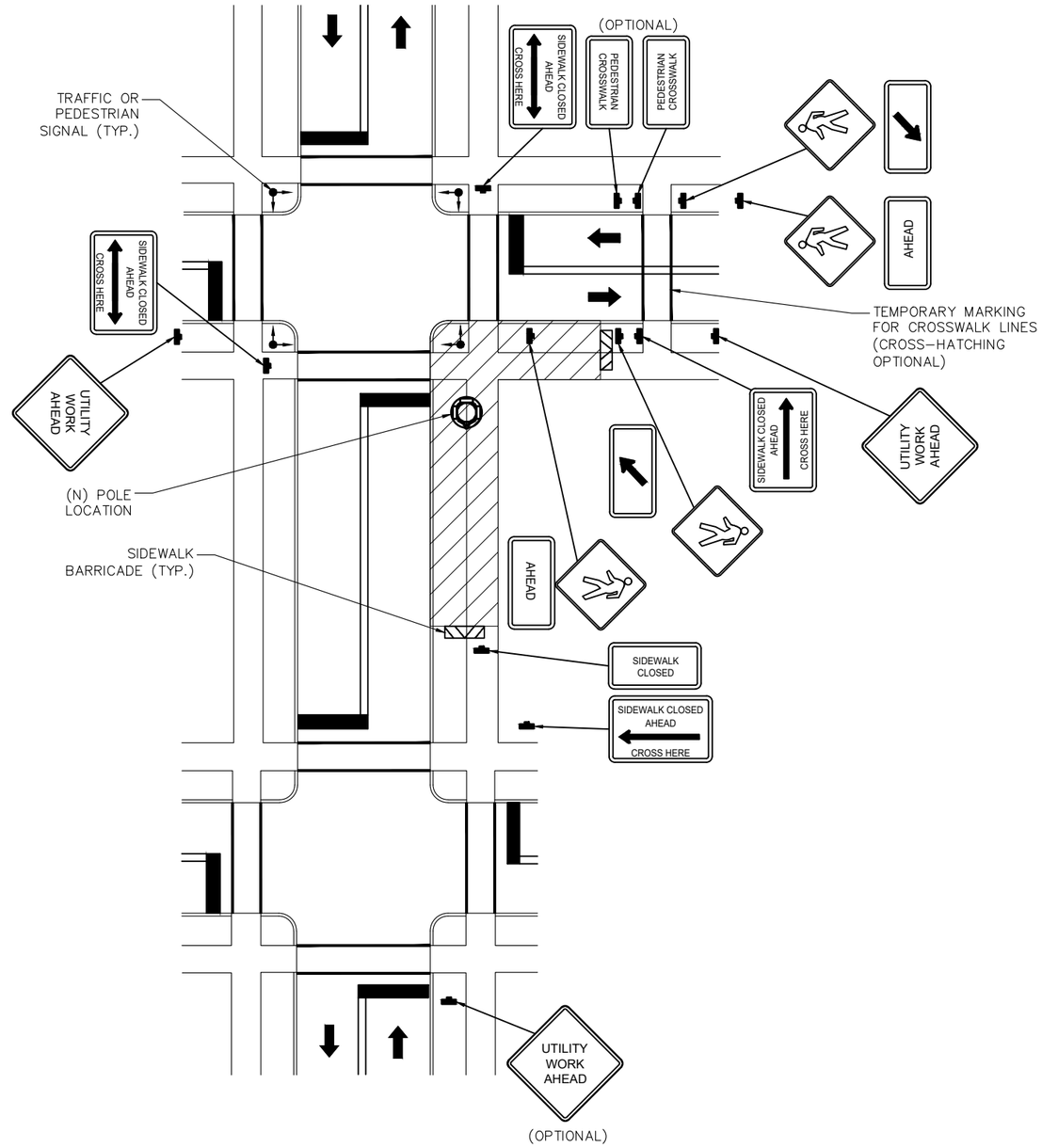

TYPICAL PEDESTRIAN / WORKER SAFETY PLAN

SCALE: NOT TO SCALE

1

TECHNOLOGY MD NETWORK COMPANY, LLC

INTERSTATE TRANSPORT AND BROADBAND

PROJECT NO:	9MDB001142D
DRAWN BY:	RC
CHECKED BY:	SJB

A	09–08–17	FOR CLIENT REVIEW

KMB DESIGN GROUP, LLC

STATE OF MARYLAND · STEPHEN A. BRAY · No. 36198 · PROFESSIONAL ENGINEER

Stephen A. Bray
PROFESSIONAL ENGINEER

MD LICENSE: 36198 9/8/17

IT IS A VIOLATION OF THE LAW FOR ANY PERSON, UNLESS THEY ARE ACTING UNDER THE DIRECTION OF A LICENSED PROFESSIONAL ENGINEER, TO ALTER THIS DOCUMENT

WA90XSH53D
UPPER MARLBORO, MD 20772
EXISTING 26'-0" WOOD POLE

SHEET TITLE
PEDESTRIAN TRAFFIC CONTROL PLAN

SHEET NUMBER
TC-2

GENERAL CONSTRUCTION NOTES:

1. ALL WORK SHALL CONFORM TO THE REQUIREMENTS OF THE LOCAL BUILDING CODE, THE LATEST ADOPTED EDITION AND ALL OTHER APPLICABLE CODES AND ORDINANCES.

2. CONTRACTOR SHALL CONSTRUCT SITE IN ACCORDANCE WITH THESE DRAWINGS AND LATEST MOBILITIE CONSTRUCTION STANDARDS. THE SPECIFICATION IS THE RULING DOCUMENT AND ANY DISCREPANCIES BETWEEN THE SPECIFICATION AND THE CONSTRUCTION DRAWINGS SHALL BE BROUGHT TO THE ATTENTION OF THE ARCHITECT/ENGINEER OR MOBILITIE CM PRIOR TO THE COMMENCEMENT OF WORK.

3. CONTRACTOR SHALL VISIT THE JOB SITE AND SHALL FAMILIARIZE THEMSELVES WITH ALL CONDITIONS AFFECTING THE (N) WORK AND SHALL MAKE PROVISIONS AS TO THE COST THEREOF. CONTRACTOR SHALL BE RESPONSIBLE FOR FAMILIARIZING THEMSELVES WITH ALL CONTRACT DOCUMENTS, FIELD CONDITIONS AND DIMENSIONS AND CONFIRMING THAT THE WORK MAY BE ACCOMPLISHED, AS SHOWN, PRIOR TO PROCEEDING WITH CONSTRUCTION. ANY DISCREPANCIES SHALL BE BROUGHT TO THE ATTENTION OF THE ARCHITECT/ENGINEER OR MOBILITIE CM PRIOR TO THE COMMENCEMENT OF WORK. NO COMPENSATION WILL BE AWARDED BASED ON CLAIM OF LACK OF KNOWLEDGE OF FIELD CONDITIONS.

4. IT IS NOT THE INTENT OF THESE PLANS TO SHOW EVERY MINOR DETAIL OF CONSTRUCTION. CONTRACTOR IS REQUIRED TO FURNISH AND INSTALL ANY/ALL ITEMS FOR A COMPLETE AND FULLY FUNCTIONAL SYSTEM SUBJECT ONLY TO OWNER-SUPPLIED ITEMS. CONTRACTOR SHALL PROVIDE ANY/ALL REQUIREMENTS FOR THE EQUIPMENT TO BE PLACED IN PROPER WORKING ORDER.

5. PLANS ARE NOT TO BE SCALED. THESE PLANS ARE INTENDED TO BE A DIAGRAMMATIC OUTLINE ONLY UNLESS OTHERWISE NOTED. THE WORK SHALL INCLUDE FURNISHING MATERIALS, EQUIPMENT AND APPURTENANCES, AND LABOR NECESSARY TO EFFECT ALL INSTALLATIONS AS INDICATED ON THE DRAWINGS. OWNER PROVIDED AND CONTRACTOR INSTALLED MATERIALS WILL INCLUDE THE FOLLOWING, UNLESS NOTED OTHERWISE:

   A) TRANSMITTER
   B) UHF ANTENNA AND MOUNTING BRACKETS, GPS UNIT AND KU BACKHAUL
   C) UHF COAX AND HANGERS
   D) INTEGRATED LOAD CENTER

6. DIMENSIONS SHOWN ARE TO FINISH SURFACES UNLESS OTHERWISE NOTED. SPACING BETWEEN EQUIPMENT IS REQUIRED CLEARANCE. THEREFORE, IT IS CRITICAL TO FIELD VERIFY DIMENSIONS. SHOULD THERE BE ANY QUESTIONS REGARDING THE CONTRACT DOCUMENTS, (E) CONDITIONS AND/OR DESIGN INTENT, THE CONTRACTOR SHALL BE RESPONSIBLE FOR REPORTING ANY DISCREPANCIES TO THE ATTENTION OF THE MOBILITIE CM, IN WRITING, PRIOR TO THE COMMENCEMENT OF WORK.

7. DETAILS PROVIDED ARE FOR THE PURPOSE OF SHOWING DESIGN INTENT. MODIFICATIONS MAY BE REQUIRED TO SUIT JOB DIMENSIONS OR SITE CONDITIONS, AND SUCH MODIFICATIONS SHALL BE INCLUDED AS PART OF THE WORK.

8. CONTRACTOR SHALL PAY FOR APPLICABLE PERMITS, FEES, INSPECTIONS AND TESTING. CONTRACTOR IS TO OBTAIN PERMIS AND APPROVED SUBMITTALS PRIOR TO ORDERING MATERIALS AND THE COMMENCEMENT OF WORK.

9. THE TERM "PROVIDE" USED IN CONSTRUCTION DOCUMENTS AND SPECIFIATIONS, INDICATES THAT THE CONTRACTOR SHALL FURNISH AND INSTALL.

10. CONTRACTOR SHALL RECEIVE CLARIFICATION IN WRITING, AND SHALL RECEIVE IN WRITING AUTHORIZATION TO PROCEED BEFORE STARTING WORK ON ANY ITEMS NOT CLEARLY DEFINED OR IDENTIFIED BY THE CONTRACT DOCUMENTS.

11. CONTRACTOR SHALL SUPERVISE AND DIRECT THE WORK USING ACCEPTED INDUSTRY-STANDARD SKILLS AND ATTENTION. CONTRACTOR SHALL BE SOLELY RESPONSIBLE FOR CONSTRUCTION MEANS, METHODS, TECHNIQUES, SEQUENCES AND PROCEDURES AND FOR COORDINATING ALL PORTIONS OF THE WORK UNDER CONTRACT, UNLESS OTHERWISE NOTED.

12. CONTRACTOR SHALL BE RESPONSIBLE FOR THE SAFETY OF THE WORK AREA, ADJACENT AREAS AND BUILDING OCCUPANTS THAT ARE LIKELY TO BE AFFECTED BY THE WORK UNDER THIS CONTRACT. WORK SHALL CONFORM TO ALL OSHA REQUIREMENTS.

13. CONTRACTOR SHALL COORDINATE THEIR WORK WITH THE MOBILITIE CM AND SCHEDULE THEIR ACTIVITIES AND WORKING HOURS IN ACCORDANCE WITH THE REQUIREMENTS.

14. CONTRACTOR SHALL BE RESPONSIBLE FOR COORDINATING THEIR WORK WITH THE WORK OF OTHERS AS IT MAY RELATE TO RADIO EQUIPMENT, ANTENNAS AND ANY OTHER PORTIONS OF THE WORK.

15. CONTRACTOR SHALL INSTALL ALL EQUIPMENT AND MATERIALS IN ACCORDANCE WITH MANUFACTURERS RECOMMENDATIONS UNLESS SPECIFICALLY OTHERWISE INDICATED OR WHERE LOCAL CODES OR REGULATIONS TAKE PRECEDENCE.

16. CONTRACTOR SHALL MAKE NECESSARY PROVISIONS TO PROTECT (E) SURFACES, EQUIPMENT, IMPROVEMENTS, PIPING ETC. AND IMMEDIATE REPAIR, TO NEW CONDITION, ANY DAMAGE THAT OCCURS DURING CONSTRUCTION AT THE SOLE COST OF THE CONTRACTOR.

17. IN DRILLING HOLES, OR CORING, INTO CONCRETE WHETHER FOR FASTENING OR ANCHORING PURPOSES, OR PENETRATIONS THROUGH THE FLOOR FOR CONDUIT RUNS, PIPE RUNS, ETC., MUST BE CLEARLY UNDERSTOOD THAT REINFORCING STEEL SHALL NOT BE DRILLED INTO, CUT OR DAMAGED UNDER ANY CIRCUMSTANCES (UNLESS NOTED OTHERWISE). LOCATIONS OF REINFORCING STEEL ARE NOT DEFINITELY KNOWN AND THEREFORE MUST BE LOCATED BY THE CONTRACTOR USING APPROPRIATE METHODS AND EQUIPMENT PRIOR TO ANY DRILLING OR CORING OPERATIONS IN (E) CONCRETE.

18. CONTRACTOR SHALL REPAIR, TO NEW CONDITION, ALL (E) WALL SURFACES DAMAGED DURING CONSTRUCTION SUCH THAT THEY MATCH AND BLEND IN WITH ADJACENT SURFACES.

19. CONTRACTOR SHALL SEAL PENETRATIONS THROUGH FIRE RATED ASSEMBLIES OR MATERIALS WITH U.L. LISTED AND FIRE CODE APPROVED MATERIALS AND SYSTEMS THAT MEET OR EXCEED THE RATING OF THE ASSEMBLY IN WHICH THE NEW PENETRATION IS PLACED.

20. CONTRACTOR SHALL KEEP CONTRACT AREA CLEAN, HAZARD FREE, AND DISPOSE OF ALL DIRT, DEBRIS, AND RUBBISH. EQUIPMENT NOT SPECIFIED AS REMAINING ON THE PROPERTY OF THE OWNER SHALL BE REMOVED. LEAVE PREMISES IN CLEAN CONDITION AND FREE FROM PAINT SPOTS, DUST, OR SMUDGES OF ANY NATURE. CONTRACTOR SHALL BE RESPONSIBLE FOR MAINTAINING ALL ITEMS UNTIL COMPLETION OF CONSTRUCTION.

21. MINIMUM BEND RADIUS OF ANTENNA CABLES SHALL BE IN ACCORDANCE WITH CABLE MANUFACTURERS RECOMMENDATIONS.

22. CONTRACTOR SHALL MINIMIZE DISTURBANCE TO (E) SITE DURING CONSTRUCTION. EROSION CONTROL MEASURES, IF REQUIRED DURING CONSTRUCTION SHALL BE IN CONFORMANCE WITH JURISDICTIONAL OR STATE AND LOCAL GUIDELINES FOR EROSION AND SEDIMENT CONTROL AND COORDINATED WITH LOCAL REGULATORY AUTHORITIES. CONTRACTOR SHALL BE RESPONSIBLE FOR MAINTENANCE OF ANY EROSION CONTROL MEASURES, RECORD-KEEPING, MONITORING, AND REPORTING TO THE OWNER AND REGULATORY AUTHORITIES.

23. ALL CONSTRUCTION WORK IS TO ADHERE TO APPLICANT'S INTEGRATED CONSTRUCTION STANDARDS UNLESS STATE OR LOCAL CODE IS MORE STRINGENT.

24. THE INTENT OF THE PLANS AND SPECIFICATIONS IS TO PERFORM THE CONSTRUCTION IN ACCORDANCE PER STATE BUILDING STANDARDS CODE AND STATE CODE OF REGULATIONS. SHOULD ANY CONDITIONS DEVELOP NOT COVERED BY THE APPROVED PLANS AND SPECIFICATIONS WHEREIN THE FINISHED WORK WILL NOT COMPLY PER STATE CODE OF REGULATIONS, A SCOPE OF WORK DETAILING AND SPECIFYING THE REQUIRED WORK SHALL BE SUBMITTED TO AND APPROVED BY THE JURISDICTION BEFORE PROCEEDING WITH THE WORK. A CHANGE ORDER FOR THAT SCOPE SHALL BE SUBMITTED TO THE MOBILITIE CM PRIOR TO PROCEEDING WITH THE WORK.

25. ADEQUATE AND REQUIRED LIABILITY INSURANCE SHALL BE PROVIDED BY THE CONTRACTOR FOR PROTECTION AGAINST PUBLIC LOSS AND ANY/ALL PROPERTY DAMAGE FOR THE DURATION OF WORK.

26. CONTRACTOR SHALL GUARANTEE ANY/ALL MATERIALS AND WORK FREE FROM DEFECTS FOR A PERIOD OF NOT LESS THAN ONE YEAR FROM DATE OF ACCEPTANCE. ANY CORRECTIVE WORK SHALL BE COMPLETED AT THE SOLE COST OF THE CONTRACTOR.

ELECTRICAL NOTES:

1. ELECTRICAL CONTRACTOR SHALL SUPPLY AND INSTALL ANY/ALL ELECTRICAL WORK INDICATED. ANY/ALL CONSTRUCTION SHALL BE IN ACCORDANCE W/DRAWINGS AND ANY/ALL APPLICABLE SPECIFICATIONS. IF ANY PROBLEMS ARE ENCOUNTERED BY COMPLYING WITH THESE REQUIREMENTS, CONTRACTOR SHALL NOTIFY MOBILITIE CM AS SOON AS POSSIBLE, AFTER THE DISCOVERY OF THE PROBLEMS, AND SHALL NOT PROCEED WITH THAT PORTION OF WORK, UNTIL THE MOBILITIE CM HAS DIRECTED THE CORRECTIVE ACTIONS TO BE TAKEN.

2. ELECTRICAL CONTRACTOR SHALL VISIT THE JOB SITE AND FAMILIARIZE THEMSELF WITH ANY/ALL CONDITIONS AFFECTING ELECTRICAL AND COMMUNICATION INSTALLATION AND MAKE PROVISIONS AS TO THE COST THEREOF. ALL (E) CONDITIONS OF ELECTRICAL EQUIP., ETC., THAT ARE PART OF THE FINAL SYSTEM, SHALL BE VERIFIED BY THE CONTRACTOR, PRIOR TO THE SUBMITTING OF THEIR BID. FAILURE TO COMPLY WITH THIS PARAGRAPH WILL IN NO WAY RELIEVE CONTRACTOR OF PERFORMING ALL WORK NECESSARY FOR A COMPLETE AND WORKING SYSTEM.

3. ALL WORK SHALL BE PERFORMED IN ACCORDANCE WITH THE LATEST EDITION OF THE NEC, ALL CODES AND ORDINANCES OF THE LOCAL JURISDICTION, AND POWER & TELEPHONE COMPANIES HAVING JURISDICTION AND SHALL INCLUDE BUT ARE NOT BE LIMITED TO:

   A) UL – UNDERWRITERS LABORATORIES
   B) NEC – NATIONAL ELECTRICAL CODE
   C) NEMA – NATIONAL ELECTRICAL MANUFACTURERS ASSOC.
   D) OSHA – OCCUPATIONAL SAFETY AND HEALTH ACT
   E) SBC – STANDARD BUILDING CODE
   F) NFPA – NATIONAL FIRE PROTECTION AGENCY
   G) ANSI – AMERICAN NATIONAL STANDARDS INSTITUTE
   H) IEEE – INSTITUTE OF ELECTRICAL AND ELECTRONICS ENGINEERS
   I) ASTM – AMERICAN SOCIETY FOR TESTING MATERIALS

4. REFER TO SITE PLANS AND ELEVATIONS FOR EXACT LOCATIONS OF ALL EQUIPMENT, AND CONFIRM WITH MOBILITIE CM ANY SIZES AND LOCATIONS WHEN NEEDED.

5. (E) SERVICES: CONTRACTOR SHALL NOT INTERRUPT (E) SERVICES WITHOUT WRITTEN PERMISSION OF THE OWNER.

6. CONTRACTOR SHALL CONFIRM WITH LOCAL UTILITY COMPANY ANY/ALL REQUIREMENTS SUCH AS THE: LUG SIZE RESTRICTIONS, CONDUIT ENTRY, SIZE OF TRANSFORMERS, SCHEDULED DOWNTIME FOR THE OWNERS' CONFIRMATION, ETC... ANY/ALL CONFLICTS SHALL BE BROUGHT TO THE ATTENTION OF THE MOBILITIE CM, PRIOR TO BEGINNING ANY WORK.

7. MINIMUM WIRE SIZE SHALL BE #12 AWG, NOT INCLUDING CONTROL WIRING, UNLESS NOTED OTHERWISE. ALL CONDUCTORS SHALL BE COPPER WITH THWN INSULATION, UNLESS OTHERWISE NOTED.

8. OUTLET BOXES SHALL BE PRESSED STEEL IN DRY LOCATIONS, CAST ALLOY WITH THREADED HUBS IN WET/DAMP LOCATIONS AND SPECIAL ENCLOSURES FOR OTHER CLASSIFIED AREAS.

9. IT IS NOT THE INTENT OF THESE PLANS TO SHOW EVERY MINOR DETAIL OF THE CONSTRUCTION. CONTRACTOR IS EXPECTED TO FURNISH AND INSTALL ALL ITEMS FOR A COMPLETE ELECTRICAL SYSTEM AND PROVIDE ALL REQUIREMENTS FOR THE EQUIPMENT TO BE PLACED IN PROPER WORKING ORDER.

10. ELECTRICAL SYSTEM SHALL BE AS COMPLETELY AND EFFECTIVELY GROUNDED, AS REQUIRED BY SPECIFICATIONS, SET FORTH BY APPLICANT.

11. ALL WORK SHALL BE PERFORMED BY A LICENSED ELECTRICAL CONTRACTOR IN A FIRST CLASS, WORKMANLIKE MANNER. THE COMPLETED SYSTEM SHALL BE FULLY FUNCTIONAL AND SHALL BE APPROVED BY THE MOBILITIE CM AND LOCAL JURISDICTION. ANY DIFICIENCIES SHALL BE CORRECTED BY AN ELECTRICAL CONTRACTOR AT THE SOLE COST OF THE CONTRACTOR.

12. ALL WORK SHALL BE COORDINATED WITH OTHER TRADES TO AVOID INTERFERENCE WITH THE PROGRESS OF CONSTRUCTION.

TECHNOLOGY MD NETWORK COMPANY, LLC

INTERSTATE TRANSPORT AND BROADBAND

PROJECT NO:	9MDB001142D
DRAWN BY:	RC
CHECKED BY:	SJB

A	09-08-17	FOR CLIENT REVIEW

KMB DESIGN GROUP, LLC

STATE OF MARYLAND · STEPHEN A. BRAY · No. 36198 · PROFESSIONAL ENGINEER

Stephen A. Bray
PROFESSIONAL ENGINEER

MD LICENSE: 36198 9/8/17

IT IS A VIOLATION OF THE LAW FOR ANY PERSON, UNLESS THEY ARE ACTING UNDER THE DIRECTION OF A LICENSED PROFESSIONAL ENGINEER, TO ALTER THIS DOCUMENT

WA90XSH53D
UPPER MARLBORO, MD 20772
EXISTING 26'-0" WOOD POLE

SHEET TITLE
GENERAL NOTES

SHEET NUMBER
GN-1

ELECTRICAL NOTES CONT'D

1. THE CORRECTION OF ANY DEFECTS SHALL BE COMPLETED BY THE CONTRACTOR WITHOUT ANY ADDITIONAL CHARGE AND SHALL INCLUDE THE REPLACEMENT OR THE REPAIR OF ANY OTHER PHASE OF THE INSTALLATION, WHICH MAY HAVE BEEN DAMAGED THEREIN.

2. CONTRACTOR SHALL PROVIDE AND INSTALL CONDUIT, CONDUCTORS, PULL WIRES, BOXES, COVER PLATES AND DEVICES FOR ALL OUTLETS AS INDICATED.

3. DITCHING AND BACK FILL: CONTRACTOR SHALL PROVIDE FOR ALL UNDERGROUND INSTALLED CONDUIT AND/OR CABLES INCLUDING EXCAVATION AND BACKFILLING AND COMPACTION. REFER TO NOTES AND REQUIREMENTS 'EXCAVATION, AND BACKFILLING.

4. MATERIALS, PRODUCTS AND EQUIPMENT, INCLUDING ALL COMPONENTS THEREOF, SHALL BE NEW AND SHALL APPEAR ON THE LIST OF U.L. APPROVED ITEMS AND SHALL MEET OR EXCEED THE REQUIREMENTS OF THE NEC, NEMA AND IECE.

5. CONTRACTOR SHALL SUBMIT SHOP DRAWINGS OR MANUFACTURER'S CATALOG INFORMATION OF ANY/ALL EQUIPMENT AND ALL OTHER ELECTRICAL ITEMS FOR APPROVAL BY THE MOBILITIE CM PRIOR TO INSTALLATION.

6. ANY CUTTING OR PATCHING DEEMED NECESSARY FOR ELECTRICAL WORK IS THE ELECTRICAL CONTRACTORS RESPONSIBILITY AND SHALL BE INCLUDED IN THE COST FOR WORK AND PERFORMED TO THE SATISFACTION OF THE MOBILITIE CM UPON FINAL ACCEPTANCE.

7. THE ELECTRICAL CONTRACTOR SHALL LABEL ALL PANELS WITH ONLY TYPEWRITTEN DIRECTORIES. ALL ELECTRICAL WIRING SHALL BE THE RESPONSIBILITY OF THE ELECTRICAL CONTRACTOR.

8. DISCONNECT SWITCHES SHALL BE UL-RATED, H.P. RATED HEAVY-DUTY, QUICK-MAKE AND QUICK-BREAK ENCLOSURES, AS REQUIRED BY EXPOSURE TYPE.

9. ALL CONNECTIONS SHALL BE MADE WITH A PROTECTIVE COATING OF AN ANTI-OXIDE COMPOUND KNOWN AS "NO-OXIDE A" BY DEARBORNE CHEMICAL CO. COAT ALL WIRE SURFACES BEFORE CONNECTING. EXPOSED COPPER SURFACES, INCLUDING GROUND BARS, SHALL BE TREATED – NO SUBSTITUTIONS.

10. RACEWAYS: CONDUIT SHALL BE SCHEDULE 80 PVC MEETING OR EXCEEDING NEMA TC2 – 1990. CONTRACTOR SHALL PLUG AND CAP EACH END OF SPARE AND EMPTY CONDUITS AND PROVIDE TWO SEPARATE PULL STRINGS – 200 LBS TEST POLYETHYLENE CORD. ALL CONDUIT BENDS SHALL BE A MINIMUM OF 2 FT. RADIUS. RGS CONDUITS WHEN SPECIFIED, SHALL MEET UL-6 FOR GALVANIZED STEEL. ALL FITTINGS SHALL BE SUITABLE FOR USE WITH THREADED RIGID CONDUIT. COAT ALL THREADS WITH 'BRITE ZINC' OR 'COLD GALV'.

11. SUPPORT OF ALL ELECTRICAL WORK SHALL BE AS REQUIRED BY NEC.

12. CONDUCTORS: CONTRACTOR SHALL USE 98% CONDUCTIVITY COPPER WITH TYPE THWN INSULATION, UNLESS OTHERWISE NOTED, 600 VOLT, COLOR CODED. USE SOLID CONDUCTORS FOR WIRE UP TO AND INCLUDING NO. 8 AWG. USE STRANDED CONDUCTORS FOR WIRE ABOVE NO. 8 AWG.

13. CONNECTORS FOR POWER CONDUCTORS: CONTRACTOR SHALL USE PRESSURE TYPE INSULATED TWIST-ON CONNECTORS FOR NO. 10 AWG AND SMALLER. USE SOLDERLESS MECHANICAL TERMINAL LUGS FOR NO. 8 AWG AND LARGER.

14. SERVICE: AS SPECIFIED ON THE DRAWINGS. OWNER OR OWNER'S AGENT WILL APPLY FOR POWER. ALL PROVISIONS FOR TEMPORARY POWER WILL BE OBTAINED BY THE CONTRACTOR.

15. TELEPHONE OR FIBER SERVICE: CONTRACTOR SHALL PROVIDE EMPTY CONDUITS WITH PULL STRINGS AS INDICATED ON DRAWINGS.

16. ELECTRICAL AND TELCO/FIBER RACEWAYS TO BE BURIED A MINIMUM DEPTH OF 30", UNLESS OTHERWISE NOTED.

17. CONTRACTOR SHALL PLACE 6" WIDE DETECTABLE WARNING TAPE AT A DEPTH OF 6" BELOW GROUND AND DIRECTLY ABOVE ELECTRICAL AND TELCO SERVICE CONDUITS. CAUTIONS TAPE TO READ "CAUTION BURIED ELECTRIC" OR "BURIED TELECOM".

18. ALL BOLTS SHALL BE 3-16 STAINLESS STEEL

GROUNDING NOTES:

1. ALL HARDWARE SHALL BE 3-16 STAINLESS STEEL, INCLUDING LOCK WASHERS. COAT ALL SURFACES WITH AN ANTI-OXIDANT COMPOUND, AS SPECIFIED, BEFORE MATING. ALL HARDWARE SHALL BE STAINLESS STEEL 3/8 INCH DIAMETER OR SIZED TO MATCH COMPONENTS OR LOG SIZE.

2. FOR GROUND BOND TO STEEL ONLY: INSERT A CADMIUM FLAT WASHER BETWEEN LUG AND STEEL, COAT ALL SURFACES WITH AN ANTI-OXIDANT COMPOUND BEFORE MATING.

3. ALL STEEL CONDUIT SHALL BE BONDED AT BOTH ENDS WITH GROUNDING BUSHING.

4. ALL ELECTRICAL AND GROUNDING AT THE POLE SITE SHALL COMPLY WITH THE NATIONAL ELECTRICAL CODE (NEC), NATIONAL FIRE PROTECTION ASSOCIATION (NFPA) 780 (LATEST EDITION), AND MANUFACTURER.

5. ALL DETAILS ARE SHOWN IN GENERAL TERMS. ACTUAL GROUNDING INSTALLATION AND CONSTRUCTION MAY VARY DUE TO SITE SPECIFIC CONDITIONS.

6. GROUND ALL ANTENNA BASES, FRAMES, CABLE RUNS, AND OTHER METALLIC COMPONENTS USING #6 GROUND WIRES. FOLLOW ANTENNA AND BTS MANUFACTURER'S PRACTICES FOR GROUNDING REQUIREMENTS.

7. ALL GROUND CONNECTIONS SHALL BE #6 AWG, UNLESS OTHERWISE NOTED. USE SOLID COPPER, BLACK JACKETED WIRE ON NON WOOD POLES AND SOLID TINNED COPPER, BARE (NO JACKET) WIRES ON WOOD POLES. BLACK WIRES WILL USE A SINGLE STRIPE OF GREEN ELECTRICAL TAPE WITHING 12" OF THE CONNECTION POINTS TO IDENTIFY AS GROUNDING WIRE.

8. NOTIFY ARCHITECT/ENGINEER IF THERE ARE ANY DIFFICULTIES INSTALLING GROUNDING SYSTEM DUE TO SITE SOIL CONDITIONS.

9. ALL HORIZONTALLY RUN GROUNDING CONDUCTORS SHALL BE INSTALLED A MINIMUM OF 30" BELOW GRADE/ 6" BELOW FROST-LINE IN TRENCH, UNLESS OTHERWISE NOTED. BACK FILL SHALL BE COMPACTED AS REQUIRED BY ARCHITECT/ENGINEER.

10. ALL GROUND CONDUCTORS SHALL BE RUN AS STRAIGHT AND SHORT AS POSSIBLE, WITH A MINIMUM 12" BENDING RADIUS NOT LESS THAN 90 DEGREES.

11. ACCEPTABLE CONNECTIONS FOR GROUNDING SYSTEM SHALL BE:

    A. BURNDY, HY-GRADE U.L. LISTED CONNECTORS FOR OUTDOOR USE OR AS APPROVED BY APPLICANT PROJECT MANAGER.
    B. CADWELD, EXOTHERMIC WELDS (WELDED CONNECTIONS).
    C. ONE (1) OR (2) HOLES TINNED COPPER COMPRESSION (LONG BARREL) FITTINGS.

12. ALL CRIMPED CONNECTIONS SHALL HAVE EMBOSSED MANUFACTURER'S DIEMARK VISIBLE AT THE CRIMP (RESULTING FROM USE OF PROPER CRIMPING DEVICES) AND WEATHER-PROOFED WITH HEAT SHRINK.

13. ALL CONNECTION HARDWARE SHALL BE TYPE 3-16 STAINLESS STEEL (NOT ATTRACTED TO MAGNETS).

14. ELECTRICAL SERVICE EQUIPMENT GROUNDING SHALL COMPLY WITH NEC, ARTICLE 250-82 AND SHALL BOND ALL (E) AND NEW GROUNDING ELECTRODES. NEW GROUNDING ELECTRODE SHALL INCLUDE BUT NOT LIMITED TO GROUND RODS.

TESTING AND EQUIPMENT TURN UP REQUIREMENTS:

1. RF CABLE, DATA CABLE, RADIO EQUIPMENT AND BACK HAUL EQUIPMENT TESTING WILL COMPLY WITH CURRENT INDUSTRY STANDARDS AND OR THOSE STANDARDS OF THE EQUIPMENT MANUFACTURER OR PROVIDED TO THE CONTRACTOR PRIOR TO TESTING.

2. CONTRACTOR WILL USE THE APPROPRIATE CALIBRATED TESTING EQUIPMENT IN THE TESTING OF RF CABLE, DATA CABLE, RADIO EQUIPMENT AND BACK HAUL EQUIPMENT THAT MEET INDUSTRY STANDARDS OF THE MANUFACTURER OR THOSE STANDARDS PROVIDED TO THE CONTRACTOR PRIOR TO TESTING.

3. CONTRACTOR TO VERIFY AND RECORD ALL TEST RESULTS AND PROVIDE THESE RESULTS WITHIN THE FINAL CLOSE OUT PACKAGE.

4. ALL PERSONNEL INVOLVED IN THE TESTING OF RF CABLE, DATA CABLE, RADIO EQUIPMENT AND BACK HAUL EQUIPMENT WILL BE REQUIRED TO HAVE BEEN TRAINED AND OR CERTIFIED IN THE PROPER TESTING OF RF CABLE, DATA CABLE, RADIO EQUIPMENT AND BACK HAUL EQUIPMENT.

5. ALL TEST RESULTS SHALL BE TIME STAMPED, RECORDED AND PRESENTED PRIOR TO ENERGIZING AND TURN UP OF ANY EQUIPMENT.

6. GPS EQUIPMENT (WHEN REQUIRED) IS NOT TO BE TESTED OR ATTACHED TO ANY CABLING DURING TESTING, DOING SO WILL DAMAGE THE GPS UNIT.

7. PRIOR TO TESTING IF THE CONTRACTOR HAS ANY QUESTIONS ABOUT THE TESTING PROCEDURES THEY ARE TO CALL AND OBTAIN ASSISTANCE FROM A QUALIFIED DESIGNATED TESTING REPRESENTATIVE.

8. EQUIPMENT IS NOT TO BE ENERGIZED UNTIL ALL TESTING HAS BEEN COMPLETED, APPROVED AND THE APPROPRIATE AUTHORITY HAS BEEN NOTIFIED AND GIVES APPROVAL TO ENERGIZE THE EQUIPMENT.

SITE WORK NOTES:

1. DO NOT EXCAVATE OR DISTURB BEYOND THE PROPERTY LINES OR LEASE LINES, UNLESS OTHERWISE NOTED.

2. SIZE, LOCATION AND TYPE OF ANY UNDERGROUND UTILITIES OR IMPROVEMENTS SHALL BE ACCURATELY NOTED AND PLACED ON AS-BUILT DRAWINGS BY GENERAL CONTRACTOR AND ISSUED TO ARCHITECT/ENGINEER AT COMPLETION OF PROJECT.

3. ALL (E) UTILITIES, FACILITIES, CONDITIONS AND THEIR DIMENSIONS SHOWN ON PLANS HAVE. BEEN PLOTTED FROM AVAILABLE RECORDS. THE ENGINEER AND OWNER ASSUME NO RESPONSIBILITY WHATSOEVER AS TO THE SUFFICIENCY OR ACCURACY OF THE INFORMATION SHOWN ON THE PLANS OR THE MANNER OF THEIR REMOVAL OR ADJUSTMENT. CONTRACTOR SHALL BE RESPONSIBLE FOR DETERMINING EXACT LOCATION OF ALL (E) UTILITIES AND FACILITIES PRIOR TO START OF CONSTRUCTION. CONTRACTOR SHALL ALSO OBTAIN FROM EACH UTILITY COMPANY DETAILED INFORMATION RELATIVE TO WORKING SCHEDULES AND METHODS OF REMOVING OR ADJUSTING (E) UTILITIES.

4. CONTRACTOR SHALL VERIFY ALL (E) UTILITIES BOTH HORIZONTALLY AND VERTICALLY PRIOR TO START OF CONSTRUCTION. ANY DISCREPANCIES OR DOUBTS AS TO THE INTERPRETATION OF PLANS SHALL BE IMMEDIATELY REPORTED TO THE ARCHITECT/ENGINEER OR MOBILITIE CM FOR RESOLUTION AND INSTRUCTION, AND NO FURTHER WORK SHALL BE PERFORMED UNTIL THE DISCREPANCY IS CHECKED AND CORRECTED BY THE ARCHITECT/ENGINEER. FAILURE TO SECURE SUCH INSTRUCTION MEANS CONTRACTOR WILL HAVE WORKED AT THEIR OWN RISK AND EXPENSE. CONTRACTOR SHALL CALL LOCAL UTILITY LOCATE HOT LINE, SUCH AS 811, FOR UTILITY LOCATIONS A MINIMUM OF 48 HOURS PRIOR TO START OF CONSTRUCTION.

5. ALL NEW AND (E) UTILITY STRUCTURES ON SITE AND IN AREAS TO BE DISTURBED BY CONSTRUCTION SHALL BE ADJUSTED TO FINISH ELEVATIONS PRIOR TO FINAL INSPECTION OF WORK. ANY COST RELATED TO ADJUSTING (E) STRUCTURES SHALL BE BORNE SOLELY BY THE CONTRACTOR.

6. GRADING OF THE SITE WORK AREA IS TO BE SMOOTH AND CONTINUOUS IN SLOPE AND IS TO FEATHER INTO (E) GRADES AT THE GRADING LIMITS.

7. ALL TEMPORARY EXCAVATIONS FOR THE INSTALLATION OF FOUNDATIONS, UTILITIES, ETC., SHALL BE PROPERLY LAID BACK OR BRACED IN ACCORDANCE WITH CORRECT OCCUPATIONAL SAFETY AND HEALTH ADMINISTRATION (OSHA) REQUIREMENTS.

TECHNOLOGY MD NETWORK COMPANY, LLC

INTERSTATE TRANSPORT AND BROADBAND

PROJECT NO:	9MDB001142D
DRAWN BY:	RC
CHECKED BY:	SJB

A	09-08-17	FOR CLIENT REVIEW

KMB DESIGN GROUP, LLC

STATE OF MARYLAND STEPHEN A. BRAY No. 36198 PROFESSIONAL ENGINEER

Stephen A. Bray
PROFESSIONAL ENGINEER

MD LICENSE: 36198 9/8/17

IT IS A VIOLATION OF THE LAW FOR ANY PERSON, UNLESS THEY ARE ACTING UNDER THE DIRECTION OF A LICENSED PROFESSIONAL ENGINEER, TO ALTER THIS DOCUMENT

WA90XSH53D
UPPER MARLBORO, MD 20772
EXISTING 26'-0" WOOD POLE

SHEET TITLE
GENERAL NOTES

SHEET NUMBER
GN-2

SITE WORK NOTES CONT'D

8. STRUCTURAL FILLS SUPPORTING PAVEMENTS SHALL BE COMPACTED TO 95% OF MAXIMUM STANDARD PROCTOR DRY DENSITY, UNLESS OTHERWISE NOTED.

9. NEW GRADES NOT IN BUILDING AND DRIVEWAY IMPROVEMENT AREA TO BE ACHIEVED BY FILLING WITH APPROVED CLEAN FILL AND COMPACTED TO 95% OF STANDARD PROCTOR DENSITY.

10. ALL FILL SHALL BE PLACED IN UNIFORM LIFTS. THE LIFTS THICKNESS SHOULD NOT EXCEED THAT WHICH CAN BE PROPERLY COMPACTED THROUGHOUT ITS ENTIRE DEPTH WITH THE EQUIPMENT AVAILABLE.

11. ANY FILLS PLACED ON (E) SLOPES THAT ARE STEEPER THAN 10 HORIZONTAL TO 1 VERTICAL SHALL BE PROPERLY BENCHED INTO THE (E) SLOPE AS DIRECTED BY A GEOTECHNICAL ENGINEER.

12. CONTRACTOR SHALL CLEAN ENTIRE SITE AFTER CONSTRUCTION SUCH THAT NO DEBRIS, PAPER, TRASH, WEEDS, BRUSH, EXCESS FILL, OR ANY OTHER DEPOSITS WILL REMAIN. ALL MATERIALS COLLECTED DURING CLEANING OPERATIONS SHALL BE DISPOSED OF OFF-SITE BY THE GENERAL CONTRACTOR.

13. ALL TREES AND SHRUBS WHICH ARE NOT IN DIRECT CONFLICT WITH THE IMPROVEMENTS SHALL BE PROTECTED BY THE GENERAL CONTRACTOR.

14. ALL SITE WORK SHALL BE CAREFULLY COORDINATED BY GENERAL CONTRACTOR WITH LOCAL UTILITY COMPANY, TELEPHONE COMPANY, AND ANY OTHER UTILITY COMPANIES HAVING JURISDICTION OVER THIS LOCATION.

ENVIRONMENTAL NOTES:

1. ALL WORK PERFORMED SHALL BE DONE IN ACCORDANCE WITH ISSUED PERMITS. THE CONTRACTOR SHALL BE RESPONSIBLE FOR PAYMENT OF FINES AND PROPER CLEAN UP FOR AREAS IN VIOLATION.

2. CONTRACTOR SHALL BE RESPONSIBLE FOR CONSTRUCTION AND MAINTENANCE OF EROSION AND SEDIMENTATION CONTROLS DURING CONSTRUCTION FOR PROTECTION OF ADJACENT PROPERTIES, ROADWAYS AND WATERWAYS. ALL EROSION AND SEDIMENTATION CONTROLS SHALL BE MAINTAINED IN PLACE THROUGH FINAL JURISDICTIONAL INSPECTION & RELEASE OF SITE.

3. CONTRACTOR SHALL INSTALL/CONSTRUCT ALL NECESSARY SEDIMENT/SILT CONTROL FENCING AND PROTECTIVE MEASURES AS REQUIRED BY THE LOCAL JURISDICTION WITHIN THE LIMITS OF SITE DISTURBANCE PRIOR TO CONSTRUCTION.

4. NO SEDIMENT SHALL BE ALLOWED TO EXIT THE PROPERTY. THE CONTRACTOR IS RESPONSIBLE FOR TAKING ADEQUATE MEASURES FOR CONTROLLING EROSION. ADDITIONAL SEDIMENT CONTROL FENCING MAY BE REQUIRED IN ANY AREAS SUBJECT TO EROSION.

5. THE CONTRACTOR IS RESPONSIBLE FOR MAINTAINING POSITIVE DRAINAGE ON THE SITE AT ALL TIMES WITH SILT AND EROSION CONTROL MEASURES MAINTAINED ON THE DOWNSTREAM SIDE OF SITE DRAINAGE. ANY DAMAGE TO ADJACENT PROPERTY AS A RESULT OF EROSION WILL BE CORRECTED AT THE CONTRACTORS EXPENSE.

6. CONTRACTOR SHALL BE RESPONSIBLE FOR DAILY INSPECTIONS AND ANY REPAIRS OF ALL SEDIMENT CONTROL MEASURES INCLUDING SEDIMENT REMOVAL AS NECESSARY.

7. CLEARING OF VEGETATION AND TREE REMOVAL SHALL BE ONLY AS PERMITTED AND BE HELD TO A MINIMUM. ONLY TREES NECESSARY FOR CONSTRUCTION OF THE FACILITIES SHALL BE REMOVED.

8. SEEDING AND MULCHING AND/OR SODDING OF THE SITE WILL BE ACCOMPLISHED AS SOON AS POSSIBLE AFTER COMPLETION OF THE PROJECT FACILITIES AFFECTING LAND DISTURBANCE.

9. CONTRACTOR SHALL PROVIDE ALL EROSION AND SEDIMENTATION CONTROL MEASURES AS REQUIRED BY LOCAL, COUNTY AND STATE CODES AND ORDINANCES TO PROTECT EMBANKMENTS FROM SOIL LOSS AND TO PREVENT ACCUMULATION OF SOIL AND SILT IN STREAMS AND DRAINAGE PATHS LEAVING THE CONSTRUCTION AREA. THIS MAY INCLUDE, BUT IS NOT LIMITED TO SUCH MEASURES AS SILT FENCES, STRAW BALE SEDIMENT BARRIERS, AND CHECK DAMS.

10. RIP RAP OF SIZES INDICATED SHALL CONSIST OF CLEAN, HARD, SOUND, DURABLE, UNIFORM IN QUALITY STONE FREE OF ANY DETRIMENTAL QUANTITY OF SOFT, FRIABLE, THIN, ELONGATED OR LAMINATED PIECES, DISINTEGRATED MATERIAL, ORGANIC MATTER, OIL, ALKALI, OR OTHER DELETERIOUS SUBSTANCES.

11. GC TO PLACE FILTER MATERIAL AT ALL CATCH BASINS ADJACENT TO CONSTRUCTION SITE TO PREVENT SOLID WASTE CONTAMINATION FROM ENTERING SEWER SYSTEM

FOUNDATION, EXCAVATION AND BACKFILL NOTES:

1. ALL FINAL GRADED SLOPES SHALL BE A MAXIMUM OF 3 HORIZONTAL TO 1 VERTICAL, UNLESS OTHERWISE NOTED.

2. BACKFILL OF THE POLE SHALL BE PERFORMED BASED ON THE WATER TABLE. FLOWABLE FILL MIXTURES PURCHASED FROM CONCRETE PLANTS WILL BE USED INSTEAD OF FOAM IN WATER TABLE AREAS.
   - A: NORMAL SOILS ORDER OF PREFERENCE – FOAM, FLOWABLE FILL, CONCRETE, COMPACTED AGGREGATES
   - B: HIGH WATER TABLE SOILS ORDER OF PREFERENCES – FLOWABLE FILL, CONCRETE, COMPACTED AGGREGATES.

3. ALL EXCAVATIONS PREPARED FOR PLACEMENT OF CONCRETE SHALL BE OF UNDISTURBED SOILS, SUBSTANTIALLY HORIZONTAL AND FREE FROM ANY LOOSE, UNSUITABLE MATERIAL OR FROZEN SOILS, AND WITHOUT THE PRESENCE OF POUNDING WATER. DEWATERING FOR EXCESS GROUND WATER SHALL BE PROVIDED WHEN REQUIRED. COMPACTION OF SOILS UNDER CONCRETE PAD FOUNDATIONS SHALL NOT BE LESS THAN 95% OF THE MODIFIED PROCTOR MAXIMUM DRY DENSITY FOR THE SOIL IN ACCORDANCE WITH ASTM D1557.

4. CONCRETE FOUNDATIONS SHALL NOT BE PLACED ON ORGANIC OR UNSUITABLE MATERIAL. IF ADEQUATE BEARING CAPACITY IS NOT ACHIEVED AT THE DESIGNED EXCAVATION DEPTH, THE UNSATISFACTORY SOIL SHALL BE EXCAVATED TO ITS FULL DEPTH AND EITHER BE REPLACED WITH MECHANICALLY COMPACTED GRANULAR MATERIAL OR THE EXCAVATION SHALL BE FILLED WITH CONCRETE OF THE SAME TYPE SPECIFIED FOR THE FOUNDATION. CRUSHED LIME STONE #57 MAY BE USED TO STABILIZE THE BOTTOM OF THE EXCAVATION. ANY STONE SUB BASE MATERIAL, IF USED, SHALL NOT SUBSTITUTE FOR REQUIRED THICKNESS OF CONCRETE.

5. ALL EXCAVATIONS SHALL BE CLEAN OF UNSUITABLE MATERIAL SUCH AS VEGETATION, TRASH, DEBRIS, AND SO FORTH PRIOR TO BACK FILLING. BACK FILL SHALL CONSIST OF APPROVED MATERIALS SUCH AS EARTH, LOAM, SANDY CLAY, SAND AND GRAVEL, OR SOFT SHALE, FREE FROM CLODS OR LARGE STONES OVER 2 1/2" MAX DIMENSIONS. ALL BACK FILL SHALL BE PLACED IN COMPACTED LAYERS.

6. ALL FILL MATERIALS AND FOUNDATION BACK FILL SHALL BE PLACED IN MAXIMUM 6" THICK LIFTS BEFORE COMPACTION. EACH LIFT SHALL BE WETTED IF REQUIRED AND COMPACTED TO NOT LESS THAN 95% OF THE MODIFIED PROCTOR MAXIMUM DRY DENSITY FOR SOIL IN ACCORDANCE WITH ASTM D1557.

7. NEWLY PLACED CONCRETE FOUNDATIONS SHALL CURE A MINIMUM OF 72 HRS PRIOR TO BACK FILLING.

8. FINISHED GRADING SHALL BE SLOPED TO PROVIDE POSITIVE DRAINAGE AND PREVENT STANDING WATER. THE FINAL (FINISH) ELEVATION OF SLAB FOUNDATIONS SHALL SLOPE AWAY IN ALL DIRECTIONS FROM THE CENTER. FINISH GRADE OF CONCRETE PADS SHALL BE A MAXIMUM OF 4 INCHES ABOVE FINAL FINISH GRADE ELEVATIONS. PROVIDE SURFACE FILL GRAVEL TO ESTABLISH SPECIFIED ELEVATIONS WHERE REQUIRED.

9. NEWLY GRADED GRAVEL SURFACE AREAS TO RECEIVE GRAVEL SHALL BE COVERED WITH GEOTEXTILE FABRIC TYPE: TYPAR-3401 AS MANUFACTURED BY TYPAR GEOSYNTHETICS OR AN APPROVED EQUIVALENT, SHOWN ON PLANS. THE GEOTEXTILE FABRIC SHALL BE BLACK IN COLOR TO CONTROL THE RECURRENCE OF VEGETATIVE GROWTH AND EXTEND TO WITHIN 1 FOOT OUTSIDE THE SITE FENCING OR ELECTRICAL GROUNDING SYSTEM PERIMETER WHICH EVER IS GREATER. ALL FABRIC SHALL BE COVERED WITH A MINIMUM OF 4" DEEP COMPACTED STONE OR GRAVEL AS SPECIFIED. I.E. FDOT TYPE NO. 57 FOR FENCED COMPOUND; FDOT TYPE NO. 67 FOR ACCESS DRIVE AREA, UNLESS OTHERWISE NOTED.

10. IN ALL AREAS TO RECEIVE FILL: REMOVE ALL VEGETATION, TOPSOIL, DEBRIS, WET AND UNSATISFACTORY SOIL MATERIALS, OBSTRUCTIONS, AND DELETERIOUS MATERIALS FROM GROUND SURFACE. PLOW STRIP OR BREAK UP SLOPED SURFACES STEEPER THAN 1 VERTICAL TO 4 HORIZONTAL SUCH THAT FILL MATERIAL WILL BIND WITH (E)/PREPARED SOIL SURFACE.

11. WHEN SUB GRADE OR PREPARED GROUND SURFACE HAS A DENSITY LESS THAN THAT REQUIRED FOR THE FILL MATERIAL, SCARIFY THE GROUND SURFACE TO DEPTH REQUIRED, PULVERIZE, MOISTURE-CONDITION AND/OR AERATE THE SOILS AND RECOMPACT TO THE REQUIRED DENSITY PRIOR TO PLACEMENT OF FILLS.

12. IN AREAS WHICH (E) GRAVEL SURFACING IS REMOVED OR DISTURBED DURING CONSTRUCTION OPERATIONS, REPLACE GRAVEL SURFACING TO MATCH ADJACENT GRAVEL SURFACING AND RESTORED TO THE SAME THICKNESS AND COMPACTION AS SPECIFIED. ALL RESTORED GRAVEL SURFACING SHALL BE FREE FROM CORRUGATIONS AND WAVES.

13. (E) GRAVEL SURFACING MAY NOT BE REUSED.

14. GRAVEL SUB SURFACE SHALL BE PREPARED TO REQUIRED COMPACTION AND SUB GRADE ELEVATIONS BEFORE GRAVEL SURFACING IS PLACED AND/OR RESTORED. ANY LOOSE OR DISTURBED MATERIALS SHALL BE THOROUGHLY COMPACTED AND ANY DEPRESSIONS IN THE SUB GRADE SHALL BE FILLED AND COMPACTED WITH APPROVED SELECTED MATERIAL. GRAVEL SURFACING MATERIAL SHALL NOT BE USED FOR FILLING DEPRESSIONS IN THE SUB GRADE.

15. PROTECT (E) GRAVEL SURFACING AND SUB GRADE IN AREAS WHERE EQUIPMENT LOADS WILL OPERATE. USE PLANKING 'MATTS' OR OTHER SUITABLE PROTECTION DESIGNED TO SPREAD EQUIPMENT LOADS AS MAY BE NECESSARY. REPAIR ANY DAMAGE TO (E) GRAVEL SURFACING OR SUB GRADE WHERE SUCH DAMAGE IS DUE TO THE CONTRACTORS OPERATIONS.

16. DAMAGE TO (E) STRUCTURES AND/OR UTILITIES RESULTING FROM CONTRACTORS NEGLIGENCE SHALL BE REPAIRED AND/ OR REPLACED TO THE OWNERS SATISFACTION AT NO ADDITIONAL COST TO THE CONTRACT.

17. ALL SUITABLE BORROW MATERIAL FOR BACK FILL OF THE SITE SHALL BE INCLUDED IN THE BID. EXCESS TOPSOIL AND UNSUITABLE MATERIAL SHALL BE DISPOSED OF OFF SITE AT LOCATIONS APPROVED BY GOVERNING AGENCIES AT NO ADDITIONAL COST TO THE CONTRACT.

TECHNOLOGY MD NETWORK COMPANY, LLC

INTERSTATE TRANSPORT AND BROADBAND

PROJECT NO:	9MDB001142D
DRAWN BY:	RC
CHECKED BY:	SJB

A	09-08-17	FOR CLIENT REVIEW

KMB DESIGN GROUP, LLC

STATE OF MARYLAND · STEPHEN A. BRAY · No. 36198 · PROFESSIONAL ENGINEER

Stephen A. Bray
PROFESSIONAL ENGINEER

MD LICENSE: 36198 9/8/17

IT IS A VIOLATION OF THE LAW FOR ANY PERSON, UNLESS THEY ARE ACTING UNDER THE DIRECTION OF A LICENSED PROFESSIONAL ENGINEER, TO ALTER THIS DOCUMENT

WA90XSH53D
UPPER MARLBORO, MD 20772
EXISTING 26'-0" WOOD POLE

SHEET TITLE
GENERAL NOTES

SHEET NUMBER
GN-3